Service manual

Rooftop

KRFN220CFAN3
KRFN260CFAN3
KRFN300CFAN3
KRFN350CFAN3
KRFN440CFAN3
KRFN530CFAN3
KRFN600CFAN3
KRFN700CFAN3
KRFN880CFAN3
KRFN1050CFAN3

Kentatsu Denki Co, Ltd.
2016

Content

Part. 1 General information..... 3
Part. 2 Performances..... 6
Part. 3 Installations..... 100

Kentatsu reserves the right to discontinue, or change specification or designs at any time without notices and without incurring obligations.

Part. 1 General information

1. Product lineup 4

2. Nomenclature 5

1. Product lineup

Nominal ton	Model	Function	Air outlet	Power supply
6.25	KRFN220CFAN3	Cooling only	Side discharge	380~415V 3Ph 50Hz
7.5	KRFN260CFAN3	Cooling only	Side discharge	
8.5	KRFN300CFAN3	Cooling only	Side discharge	
10	KRFN350CFAN3	Cooling only	Side discharge	
12.5	KRFN440CFAN3	Cooling only	Side discharge	
15	KRFN530CFAN3	Cooling only	Side discharge	
17.5	KRFN600CFAN3	Cooling only	Side discharge	
20	KRFN700CFAN3	Cooling only	Side discharge	
25	KRFN880CFAN3	Cooling only	Side discharge	
30	KRFN1050CFAN3	Cooling only	Side discharge	

Notes: Please refer to specification tables for accurate cooling capacity with kW or Btu/h.

2. Nomenclatures

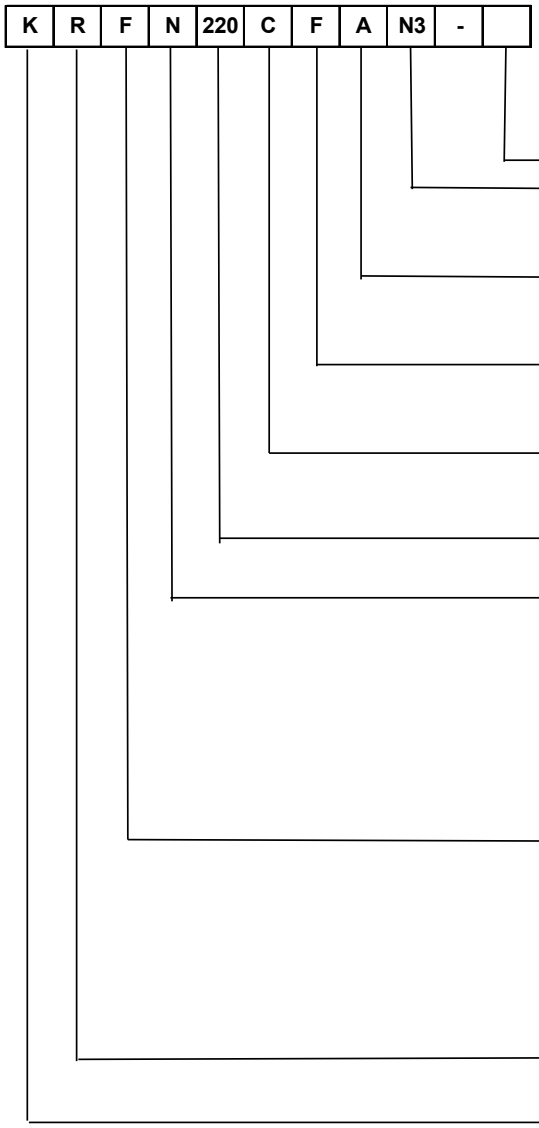

Конструктивные особенности
Источник энергии:
N1 - однофазное напряжение 220-240В, 50Гц, 1ф;
N3 - трехфазное напряжение 380В, 50Гц, 3ф.
Хладагент:
A - R410A;
D - R22.
Технология работы компрессора:
F - стандартная (on/off);
Z - инверторная.
Тепловой режим работы:
C – только охлаждение;
H – охлаждение/нагрев.
Цифровой индекс блока:
номинальная производительность в кВт x 10.
Серия

Вид и тип отдельного блока:
Внутренний:
C - подпортолочный;
F - напольный;
G - настенный;
H - универсальный;
K - канальный средненапорный (до 100 Па включительно);
L - канальный низконапорный (до 50 Па включительно);
T - канальный высоконапорный (свыше 100 Па);
V - кассетный четырехпоточный;
Y - кассетный однопоточный;
Z - кассетный 600x600.
Наружный:
U - универсальный с воздушным охлаждением
Вид климатической техники:
R – крышный кондиционер.
Символ бренда (производителя):
K - KENTATSU

Part. 2 Performances

1. Features 7
2. Specifications 9
3. Dimensions drawings 27
4. Wiring diagrams 38
5. Performance data 46
6. Electrical data 76
7. Fan performance data 77
8. Refrigerant cycle diagram 98
9. Operation limits 99

1. Features

✧ Design flexibility.

Compact design and flanges of air flow inlet and outlet as standard. It is suitable for installation in rooftop and ground.

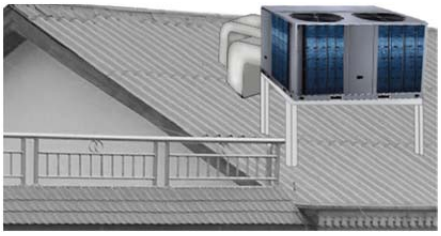

✧ Durable construction.

Pre-painted exterior cabinet panels pass 1000 hours salt spray test for durability. Weather-resistant construction with capped steams and sloped top panels design.

The rooftop package air conditioners with special anti-corrosion treatment are suitable for seaside areas or the areas exposed to acidic substances. (It should be customized.)

✧ Reliable scroll compressor.

Famous brand compressor, it is more reliable. No complex internal suction and discharge valves for quieter operation and higher reliability. Compact and light-weight design, fewer moving parts design.

✧ Adjustable pulley

Through changing the working pitch diameter of the pulley mounted on driver shaft, in turn the revolutions per minute of the driven shaft will increase or decrease to change air volume.

✧ Multi-protection design.

Multi-measurement can ensure units operate normally and reliably:

System current protection;

High/low-pressure switch protection;

Temperature sensor on/off protection, etc.

The three-phase protector can be customized.

- ✧ Easy to installation.

  Removable access door on the electric box is standard. It is easy to move the cover of the electric box. Only connect the wires of power supply, and no need to connect any signal wires. Reserved external drainage port, quickly and accurately connect the rubber drainage pipe.

- ✧ The unit provides external pressure gauge ports for convenient and fast checking system pressure without removing the panel.

- ✧ System self-diagnostic function.

  Press the Check button in Main PCB board, and the LED display of PCB board in unit will display the normal checking code. If the unit is in running with abnormal operation, the LED display will show the error code.

- ✧ Wired controller as standard. Besides Kentatsu controller, other brand thermostat can be matched as optional solution.
- ✧ Centralized control function can be achieved through the centralized controller as optional. KNI-02 should be connected between the rooftop package units and centralized controller.

2. Specifications

Nominal ton		**(Ton)**	**6.2**	**7.5**
Model			**KRFN220CFAN3**	**KRFN260CFAN3**
Power supply		\	380~415V, 3Ph, 50Hz	380~415V, 3Ph, 50Hz
Cooling 1	Cooling capacity	Btu/h	75,000	89,000
		kW	22.0	26.0
	Power input	kW	6.6	7.9
Cooling 2	Cooling capacity	Btu/h	61,400	69,600
		kW	18.0	20.4
	Power input	kW	7.8	9.0
Max. input consumption		kW	9.0	13.6
Max. current		A	19.3	27.2
Performance	Indoor air flow	CFM	2,800	2,830
	ESP	Pa	Default:80; 0~250	Default: 80; 0~250
	EER 1	Btu/h.W	11.4	11.3
	EER 2	Btu/h.W	7.9	7.8
Indoor coil	Number of rows	\	4	3
	Fin spacing	mm	1.3	1.3
	Fin type	\	Hydrophilic aluminum fin	Hydrophilic aluminum fin
	Tube diameter	mm	Φ7	Φ7
	Tube type	\	Inner grooved copper pipe	Inner grooved copper pipe
Indoor fan	Type / Quantity	\	Centrifugal / 1	Centrifugal / 1
	Drive type	\	Direct	Direct
	Motor quantity	\	1	1
	Motor model	\	YDK750-4E	YDK750-4E
	Motor capacitor	\	25μF/450V	25μF/450V
	Motor input	W	1,600/1,350/1,150	1,600/1,350/1,150
	Motor speed	RPM	1,090/985/895	1,090/985/895
Compressor	Type	\	Scroll / 1	Scroll / 1
	Model	\	ZP72KCE-TFD-52E	HCJ106
	Brand	\	Copeland	Danfoss
	Capacity	W	17,200	26,100
	Input	W	5,650	8,080
	RLA	A	12.5	14.3
	LRA	A	75	121.2
	Refrigerant oil	ml	1,774	2,460
Outdoor coil	Number of rows	\	2.5	3
	Fin spacing	mm	1.5	1.5
	Fin type	\	Hydrophilic aluminum fin	Hydrophilic aluminum fin
	Tube diameter	mm	Φ7	Φ7
	Tube type	\	Inner grooved copper pipe	Inner grooved copper pipe

Continued:

Nominal ton		**(Ton)**	**6.2**	**7.5**
Model			**KRFN220CFAN3**	**KRFN260CFAN3**
Outdoor fan	Type	\	Axial	Axial
	Quantity	\	1	1
	Drive type	\	Direct	Direct
	Motor quantity	\	1	1
	Motor model	\	YDK450-6C	YDK580-6C
	Motor capacitor	\	25μF/450V	25μF/450V
	Motor input	W	757/403	820/505
	Fan speed	RPM	840/550	870/640
Refrigerant	Type	\	R410A	R410A
	Volume	kg	4.0	3.7
	Control	\	Throttle valve	Throttle valve
Wired controller		\	KFC-14	KFC-14
Centralized controller (Optional)		\	No	No
Ambient temperature (Cooling)		°C	10~52	10~52
System stage		\	1	1
Dimensions	Net (W×H×D)	mm	1,475×840×1,130	1,475×840×1,130
	Packing (W×H×D)	mm	1,495×870×1,150	1,495×870×1,150
Weight	Net	kg	223	231
	Gross	kg	228	236

Notes:

1. Nominal ton only for reference. Cooling capacity as per specifications;

2. Cooling capacity test condition: (1)

Outdoor ambient temperature: 35°C, indoor temperature: 26.7°CDB, 19.4°CWB;

Cooling capacity test condition: (2)

Outdoor ambient temperature: 46.1°C, indoor temperature: 26.7°CDB, 19.4°CWB;

3. Units are suitable for operation to ±20% of nominal indoor air flow.

4. ESP: external static pressure;

5. Specifications are subject to change without prior notice for product improvement.

Nominal ton		**(Ton)**	**8.5**	
Model			**KRFN300CFAN3**	
Power Supply		\	380~415V, 3Ph, 50Hz	
Cooling 1	Cooling capacity	Btu/h	102,000	
		kW	30.0	
	Power input	kW	9.2	
Cooling 2	Cooling capacity	Btu/h	80,700	
		kW	23.7	
	Power input	kW	10.3	
Max. input consumption		kW	14.8	
Max. current		A	29.2	
Performance	Indoor air flow	CFM	3,500	
	ESP	Pa	Default: 80; 0~200	
	EER 1	Btu/h.W	11.1	
	EER 2	Btu/h.W	7.9	
Indoor coil	Number of rows	\	4	
	Fin spacing	mm	1.5	
	Fin type	\	Hydrophilic aluminum fin	
	Tube diameter	mm	Φ7	
	Tube type	\	Inner grooved copper pipe	
Indoor fan	Type / Quantity	\	Centrifugal / 1	
	Drive type	\	Belt	
	Motor quantity	\	1	
	Motor model	\	YE2-90L-4-1.5KW	
	Motor capacitor	\	\	
	Motor input	W	\	
	Motor speed	RPM	1,400	
Compressor	Type / Quantity	\	Scroll / 2	
	Model	\	E604DH-59D2G	E604DH-59D2G
	Brand	\	Hitachi	Hitachi
	Capacity	W	15,390	15,390
	Input	W	5,130	5,130
	RLA	A	8.8	8.8
	LRA	A	62	62
	Refrigerant oil	ml	1,300	1,300
Outdoor coil	Number of rows	\	2.5	
	Fin spacing	mm	1.5	
	Fin type	\	Hydrophilic aluminum fin	
	Tube diameter	mm	Φ7	
	Tube type	\	Inner grooved copper pipe	

Continued:

Nominal ton		**(Ton)**	**8.5**
Model			**KRFN300CFAN3**
Outdoor fan	Type	\	Axial
	Quantity	\	1
	Drive type	\	Direct
	Motor quantity	\	1
	Motor model	\	YDK580-6C
	Motor capacitor	\	25μF/450V
	Motor input	W	820/505
	Fan speed	RPM	870/640
Refrigerant	Type	\	R410A
	Volume	kg	2.25+2.25
	Control	\	Throttle valve
Wired controller		\	KWC-22
Centralized controller (Optional)		\	Yes
Ambient temperature (Cooling)		°C	10~52
System stage		\	2
Dimensions	Net (W×H×D)	mm	1,483×1,231×1,138
	Packing (W×H×D)	mm	1,500×1,255×1,155
Weight	Net	kg	331
	Gross	kg	342

Notes:

1. Nominal ton only for reference. Cooling capacity as per specifications;

2. Cooling capacity test condition: (1)

Outdoor ambient temperature: 35°C, indoor temperature: 26.7°CDB, 19.4°CWB;

Cooling capacity test condition: (2)

Outdoor ambient temperature: 46.1°C, indoor temperature: 26.7°CDB, 19.4°CWB;

3. Units are suitable for operation to ±20% of nominal indoor air flow.

4. ESP: external static pressure;

5. Specifications are subject to change without prior notice for product improvement.

Nominal ton		**(Ton)**	**10**	
Model			**KRFN350CFAN3**	
Power supply		\	380~415V, 3Ph, 50Hz	
Cooling 1	Cooling capacity	Btu/h	120,000	
		kW	35.0	
	Power input	kW	10.7	
Cooling 2	Cooling capacity	Btu/h	100,200	
		kW	29.4	
	Power input	kW	12.6	
Max. input consumption		kW	18.0	
Max. current		A	34.1	
Performance	Indoor air flow	CFM	4,100	
	ESP	Pa	Default: 90; 0~250	
	EER 1	Btu/h.W	11.2	
	EER 2	Btu/h.W	8.0	
Indoor coil	Number of rows	\	4	
	Fin spacing	mm	1.5	
	Fin type	\	Hydrophilic aluminum fin	
	Tube diameter	mm	Φ7	
	Tube type	\	Inner grooved copper pipe	
Indoor fan	Type / Quantity	\	Centrifugal / 1	
	Drive type	\	Belt	
	Motor quantity	\	1	
	Motor model	\	YE2-90L-4-1.5KW	
	Motor capacitor	\	\	
	Motor input	W	\	
	Motor speed	RPM	1,400	
Compressor	Type / Quantity	\	Scroll / 2	
	Model	\	E654DH-65D2G	E654DH-65D2G
	Brand	\	Hitachi	Hitachi
	Capacity	W	17,100	17,100
	Input	W	5,700	5,700
	RLA	A	9.6	9.6
	LRA	A	66	66
	Refrigerant oil	ml	1,300	1,300
Outdoor coil	Number of rows	\	2.5	
	Fin spacing	mm	1.5	
	Fin type	\	Hydrophilic aluminum fin	
	Tube diameter	mm	Φ7	
	Tube type	\	Inner grooved copper pipe	

Continued:

Nominal ton		**(Ton)**	**10**
Model			**KRFN350CFAN3**
Outdoor fan	Type	\	Axial
	Quantity	\	1
	Drive type	\	Direct
	Motor quantity	\	1
	Motor model	\	YS1100-6P
	Motor capacitor	\	\
	Motor input	W	\
	Fan speed	RPM	1,120/965
Refrigerant	Type	\	R410A
	Volume	kg	2.35+2.35
	Control	\	Throttle valve
Wired controller		\	KWC-22
Centralized controller (Optional)		\	Yes
Ambient temperature (Cooling)		°C	10~52
System stage		\	2
Dimensions	Net (W×H×D)	mm	1,483×1,231×1,138
	Packing (W×H×D)	mm	1,500×1,255×1,155
Weight	Net	kg	335
	Gross	kg	346

Notes:

1. Nominal ton only for reference. Cooling capacity as per specifications;

2. Cooling capacity test condition: (1)

Outdoor ambient temperature: 35°C, indoor temperature: 26.7°CDB, 19.4°CWB;

Cooling capacity test condition: (2)

Outdoor ambient temperature: 46.1°C, indoor temperature: 26.7°CDB, 19.4°CWB;

3. Units are suitable for operation to ±20% of nominal indoor air flow.

4. ESP: external static pressure;

5. Specifications are subject to change without prior notice for product improvement.

Nominal ton		**(Ton)**	**12.5**	
Model			**KRFN440CFAN3**	
Power supply		\	380~415V, 3Ph, 50Hz	
Cooling 1	Cooling capacity	Btu/h	150,000	
		kW	44.0	
	Power input	kW	13.3	
Cooling 2	Cooling capacity	Btu/h	125,400	
		kW	36.8	
	Power input	kW	16.1	
Max. input consumption		kW	21.0	
Max. current		A	41.2	
Performance	Indoor air flow	CFM	5,500	
	ESP	Pa	Default: 110; 0~275	
	EER 1	Btu/h.W	11.3	
	EER 2	Btu/h.W	7.8	
Indoor coil	Number of rows	\	4+4	
	Fin spacing	mm	1.3+1.3	
	Fin type	\	Hydrophilic aluminum fin	
	Tube diameter	mm	Φ7+Φ7	
	Tube type	\	Inner grooved copper pipe	
Indoor fan	Type / Quantity	\	Centrifugal / 1	
	Drive type	\	Belt	
	Motor quantity	\	1	
	Motor model	\	YE2-100L2-4-3KW	
	Motor capacitor	\	\	
	Motor input	W	\	
	Motor speed	RPM	1,420	
Compressor	Type / Quantity	\	Scroll / 2	
	Model	\	ZP61KCE-TFD-522	ZP122KCE-TFD-522
	Brand	\	Copeland	Copeland
	Capacity	W	14,700	29,900
	Input	W	4,750	9,190
	RLA	A	10.9	18
	LRA	A	64	127
	Refrigerant oil	ml	1,685	2,513
Outdoor coil	Number of rows	\	3	
	Fin spacing	mm	1.5	
	Fin type	\	Hydrophilic aluminum fin	
	Tube diameter	mm	Φ7	
	Tube type	\	Inner grooved copper pipe	

Continued:

Nominal ton		**(Ton)**	**12.5**
Model			**KRFN440CFAN3**
Outdoor fan	Type	\	Axial
	Quantity	\	1
	Drive type	\	Direct
	Motor quantity	\	1
	Motor model	\	YDK550-6E
	Motor capacitor	\	25μF/450V
	Motor input	W	740/640
	Fan speed	RPM	880/810
Refrigerant	Type	\	R410A
	Volume	kg	2.8+1.7
	Control	\	Throttle valve
Wired controller		\	KWC-22
Centralized controller (Optional)		\	Yes
Ambient temperature (Cooling)		°C	10~52
System stage		\	2
Dimensions	Net (W×H×D)	mm	1,965×1,230×1,130
	Packing (W×H×D)	mm	1,995×1,255×1,160
Weight	Net	kg	433
	Gross	kg	453

Notes:

1. Nominal ton only for reference. Cooling capacity as per specifications;

2. Cooling capacity test condition: (1)

Outdoor ambient temperature: 35°C, indoor temperature: 26.7°CDB, 19.4°CWB;

Cooling capacity test condition: (2)

Outdoor ambient temperature: 46.1°C, indoor temperature: 26.7°CDB, 19.4°CWB;

3. Units are suitable for operation to ±20% of nominal indoor air flow.

4. ESP: external static pressure;

5. Specifications are subject to change without prior notice for product improvement.

Nominal ton		**(Ton)**	**15**	
Model			**KRFN530CFAN3**	
Power supply		\	380~415V, 3Ph, 50Hz	
Cooling 1	Cooling capacity	Btu/h	180,000	
		kW	53.0	
	Power input	kW	16.7	
Cooling 2	Cooling capacity	Btu/h	146,000	
		kW	42.8	
	Power input	kW	18.7	
Max. input consumption		kW	25.0	
Max. current		A	48.0	
Performance	Indoor air flow	CFM	7,000	
	ESP	Pa	Default: 110; 0~325	
	EER 1	Btu/h.W	10.8	
	EER 2	Btu/h.W	7.8	
Indoor coil	Number of rows	\	4+4	
	Fin spacing	mm	1.3+1.3	
	Fin type	\	Hydrophilic aluminum fin	
	Tube diameter	mm	Φ7+Φ7	
	Tube type	\	Inner grooved copper pipe	
Indoor fan	Type / Quantity	\	Centrifugal / 1	
	Drive type	\	Belt	
	Motor quantity	\	1	
	Motor model	\	YE2-112M-4-4KW	
	Motor capacitor	\	\	
	Motor input	W	\	
	Motor speed	RPM	1,440	
Compressor	Type / Quantity	\	Scroll / 2	
	Model	\	ZP61KCE-TFD-522	ZP144KCE-TFD-522
	Brand	\	Copeland	Copeland
	Capacity	W	14,700	35,400
	Input	W	4,750	10,800
	RLA	A	10.9	21.1
	LRA	A	64	144
	Refrigerant oil	ml	1,685	3,253
Outdoor coil	Number of rows	\	3.5	
	Fin spacing	mm	1.6	
	Fin type	\	Hydrophilic aluminum fin	
	Tube diameter	mm	Φ8	
	Tube type	\	Inner grooved copper pipe	

Continued:

Nominal ton		**(Ton)**	**15**
Model			**KRFN530CFAN3**
Outdoor fan	Type	\	Axial
	Quantity	\	1
	Drive type	\	Direct
	Motor quantity	\	1
	Motor model	\	YS1100-6
	Motor capacitor	\	\
	Motor input	W	\
	Fan speed	RPM	1,120/965
Refrigerant	Type	\	R410A
	Volume	kg	4.9+2.25
	Control	\	Throttle valve
Wired controller		\	KWC-22
Centralized controller (Optional)		\	Yes
Ambient temperature (Cooling)		°C	10~52
System stage		\	2
Dimensions	Net (W×H×D)	mm	1,965×1,230×1,130
	Packing (W×H×D)	mm	1,995×1,255×1,160
Weight	Net	kg	470
	Gross	kg	490

Notes:

1. Nominal ton only for reference. Cooling capacity as per specifications;

2. Cooling capacity test condition: (1)

Outdoor ambient temperature: 35°C, indoor temperature: 26.7°CDB, 19.4°CWB;

Cooling capacity test condition: (2)

Outdoor ambient temperature: 46.1°C, indoor temperature: 26.7°CDB, 19.4°CWB;

3. Units are suitable for operation to ±20% of nominal indoor air flow.

4. ESP: external static pressure;

5. Specifications are subject to change without prior notice for product improvement.

Nominal ton		**(Ton)**	**17.5**	
Model			**KRFN600CFAN3**	
Power supply		\	380~415V, 3Ph, 50Hz	
Cooling 1	Cooling capacity	Btu/h	208,000	
		kW	61.0	
	Power input	kW	19.1	
Cooling 2	Cooling capacity	Btu/h	181,100	
		kW	53.1	
	Power input	kW	22.6	
Max. input consumption		kW	26.5	
Max. current		A	55.0	
Performance	Indoor air flow	CFM	7,600	
	ESP	Pa	Default: 110; 0~250	
	EER 1	Btu/h.W	10.9	
	EER 2	Btu/h.W	8.0	
Indoor coil	Number of rows	\	3	
	Fin spacing	mm	1.3	
	Fin type	\	Hydrophilic aluminum fin	
	Tube diameter	mm	Φ7	
	Tube type	\	Inner grooved copper pipe	
Indoor fan	Type / Quantity	\	Centrifugal / 2	
	Drive type	\	Belt	
	Motor quantity	\	1	
	Motor model	\	YE2-112M-4-4KW	
	Motor capacitor	\	\	
	Motor input	W	\	
	Motor speed	RPM	1,440	
Compressor	Type / Quantity	\	Scroll / 2	
	Model	\	ZP122KCE-TFD-522	ZP122KCE-TFD-522
	Brand	\	Copeland	Copeland
	Capacity	W	29,900	29,900
	Input	W	9,190	9,190
	RLA	A	18	18
	LRA	A	127	127
	Refrigerant oil	ml	2,513	2,513
Outdoor coil	Number of rows	\	2.4+2.4	
	Fin spacing	mm	1.5+1.5	
	Fin type	\	Hydrophilic aluminum fin	
	Tube diameter	mm	Φ7+Φ7	
	Tube type	\	Inner grooved copper pipe	

Continued:

Nominal ton		**(Ton)**	**17.5**
Model			**KRFN600CFAN3**
Outdoor fan	Type	\	Axial
	Quantity	\	2
	Drive type	\	Direct
	Motor quantity	\	2
	Motor model	\	YDK550-6E
	Motor capacitor	\	25μF/450V
	Motor input	W	740/640
	Fan speed	RPM	880/810
Refrigerant	Type	\	R410A
	Volume	kg	3.7+3.7
	Control	\	Throttle valve
Wired controller		\	KWC-22
Centralized controller (Optional)		\	Yes
Ambient temperature (Cooling)		°C	10~52
System stage		\	2
Dimensions	Net (W×H×D)	mm	1,670×1,247×2,192
	Packing (W×H×D)	mm	1,695×1,284×2,212
Weight	Net	kg	590
	Gross	kg	620

Notes:

1. Nominal ton only for reference. Cooling capacity as per specifications;

2. Cooling capacity test condition: (1)

Outdoor ambient temperature: 35°C, indoor temperature: 26.7°CDB, 19.4°CWB;

Cooling capacity test condition: (2)

Outdoor ambient temperature: 46.1°C, indoor temperature: 26.7°CDB, 19.4°CWB;

3. Units are suitable for operation to ±20% of nominal indoor air flow.

4. ESP: external static pressure;

5. Specifications are subject to change without prior notice for product improvement.

Nominal ton		**(Ton)**	**20**	
Model			**KRFN700CFAN3**	
Power supply		\	380~415V, 3Ph, 50Hz	
Cooling 1	Cooling capacity	Btu/h	240,000	
		kW	70.0	
	Power input	kW	22.6	
Cooling 2	Cooling capacity	Btu/h	199,200	
		kW	58.4	
	Power input	kW	25.1	
Max. input consumption		kW	33.0	
Max. current		A	66.9	
Performance	Indoor air flow	CFM	8,800	
	ESP	Pa	Default: 120; 0~375	
	EER 1	Btu/h.W	10.6	
	EER 2	Btu/h.W	7.9	
Indoor coil	Number of rows	\	4	
	Fin spacing	mm	1.3	
	Fin type	\	Hydrophilic aluminum fin	
	Tube diameter	mm	Φ7	
	Tube type	\	Inner grooved copper pipe	
Indoor fan	Type / Quantity	\	Centrifugal / 2	
	Drive type	\	Belt	
	Motor quantity	\	1	
	Motor model	\	YE2-132S-4-5.5KW	
	Motor capacitor	\	\	
	Motor input	W	\	
	Motor speed	RPM	1,440	
Compressor	Type / Quantity	\	Scroll / 2	
	Model	\	ZP144KCE-TFD-522	ZP144KCE-TFD-522
	Brand	\	Copeland	Copeland
	Capacity	W	35,400	35,400
	Input	W	10,800	10,800
	RLA	A	21.1	21.1
	LRA	A	144	144
	Refrigerant oil	ml	3,253	3,253
Outdoor coil	Number of rows	\	3	
	Fin spacing	mm	1.5+1.5	
	Fin type	\	Hydrophilic aluminum fin	
	Tube diameter	mm	Φ7+Φ7	
	Tube type	\	Inner grooved copper pipe	

Continued:

Nominal ton		**(Ton)**	**20**
Model			**KRFN700CFAN3**
Outdoor fan	Type	\	Axial
	Quantity	\	2
	Drive type	\	Direct
	Motor quantity	\	2
	Motor model	\	YS1100-6-3
	Motor capacitor	\	\
	Motor input	W	\
	Fan speed	RPM	1,090/944
Refrigerant	Type	\	R410A
	Volume	kg	5.65+5.65
	Control	\	Throttle valve
Wired controller		\	KWC-22
Centralized controller (Optional)		\	Yes
Ambient temperature (Cooling)		°C	10~52
System stage		\	2
Dimensions	Net (W×H×D)	mm	1,670×1,247×2,192
	Packing (W×H×D)	mm	1,695×1,284×2,212
Weight	Net	kg	670
	Gross	kg	700

Notes:

1. Nominal ton only for reference. Cooling capacity as per specifications;

2. Cooling capacity test condition: (1)

Outdoor ambient temperature: 35°C, indoor temperature: 26.7°CDB, 19.4°CWB;

Cooling capacity test condition: (2)

Outdoor ambient temperature: 46.1°C, indoor temperature: 26.7°CDB, 19.4°CWB;

3. Units are suitable for operation to ±20% of nominal indoor air flow.

4. ESP: external static pressure;

5. Specifications are subject to change without prior notice for product improvement.

Nominal ton		**(Ton)**	**25**	
Model			**KRFN880CFAN3**	
Power supply		\	380~415V, 3Ph, 50Hz	
Cooling 1	Cooling capacity	Btu/h	300,000	
		kW	87.0	
	Power input	kW	28.0	
Cooling 2	Cooling capacity	Btu/h	251,700	
		kW	73.8	
	Power input	kW	32.0	
Max. input consumption		kW	40.5	
Max. current		A	77.4	
Performance	Indoor air flow	CFM	10,000	
	ESP	Pa	Default: 110; 0~350	
	EER 1	Btu/h.W	10.7	
	EER 2	Btu/h.W	7.9	
Indoor coil	Number of rows	\	4	
	Fin spacing	mm	1.6	
	Fin type	\	Hydrophilic aluminum fin	
	Tube diameter	mm	Φ8	
	Tube type	\	Inner grooved copper pipe	
Indoor fan	Type / Quantity	\	Centrifugal / 2	
	Drive type	\	Belt	
	Motor quantity	\	1	
	Motor model	\	YE2-132M-4-7.5KW	
	Motor capacitor	\	\	
	Motor input	W	\	
	Motor speed	RPM	1,440	
Compressor	Type / Quantity	\	Scroll / 2	
	Model	\	SH161A4ALC	SH161A4ALC
	Brand	\	Danfoss	Danfoss
	Capacity	W	38,800	38,800
	Input	W	12,145	12,145
	RLA	A	23.6	23.6
	LRA	A	158	158
	Refrigerant oil	ml	3,300	3,300
Outdoor coil	Number of rows	\	3+2+3+2	
	Fin spacing	mm	1.5+1.5+1.5+1.5	
	Fin type	\	Hydrophilic aluminum fin	
	Tube diameter	mm	Φ7+Φ7+Φ7+Φ7	
	Tube type	\	Inner grooved copper pipe	

Continued:

Nominal ton		**(Ton)**	**25**
Model			**KRFN880CFAN3**
Outdoor fan	Type	\	Axial
	Quantity	\	2
	Drive type	\	Direct
	Motor quantity	\	2
	Motor model	\	YS1500-6-2
	Motor capacitor	\	\
	Motor input	W	\
	Fan speed	RPM	910
Refrigerant	Type	\	R410A
	Volume	kg	6+6
	Control	\	Capillary
Wired controller		\	KWC-22
Centralized controller (Optional)		\	Yes
Ambient temperature (Cooling)		°C	10~52
System stage		\	2
Dimensions	Net (W×H×D)	mm	2,320×1,245×2,220
	Packing (W×H×D)	mm	2,330×1,275×2,230
Weight	Net	kg	895
	Gross	kg	925

Notes:

1. Nominal ton only for reference. Cooling capacity as per specifications;

2. Cooling capacity test condition: (1)

Outdoor ambient temperature: 35°C, indoor temperature: 26.7°CDB, 19.4°CWB;

Cooling capacity test condition: (2)

Outdoor ambient temperature: 46.1°C, indoor temperature: 26.7°CDB, 19.4°CWB;

3. Units are suitable for operation to ±20% of nominal indoor air flow.

4. ESP: external static pressure;

5. Specifications are subject to change without prior notice for product improvement.

Nominal ton		**(Ton)**	**30**	
Model			**KRFN1050CFAN3**	
Power supply		\	380~415V, 3Ph, 50Hz	
Cooling 1	Cooling capacity	Btu/h	360,000	
		kW	105.0	
	Power input	kW	34.3	
Cooling 2	Cooling capacity	Btu/h	336,300	
		kW	98.6	
	Power input	kW	41.8	
Max. input consumption		kW	49.5	
Max. current		A	94.1	
Performance	Indoor air flow	CFM	12,000	
	ESP	Pa	Default: 270; 0~400	
	EER 1	Btu/h.W	10.5	
	EER 2	Btu/h.W	8.0	
Indoor coil	Number of rows	\	4	
	Fin spacing	mm	1.6	
	Fin type	\	Hydrophilic aluminum fin	
	Tube diameter	mm	Φ8	
	Tube type	\	Inner grooved copper pipe	
Indoor fan	Type / Quantity	\	Centrifugal / 2	
	Drive type	\	Belt	
	Motor quantity	\	1	
	Motor model	\	YE2-132M-4-7.5KW	
	Motor capacitor	\	\	
	Motor input	W	\	
	Motor speed	RPM	1,440	
Compressor	Type / Quantity	\	Scroll / 2	
	Model	\	SH184A4ALC	SH184A4ALC
	Brand	\	Danfoss	Danfoss
	Capacity	W	44,661	44,661
	Input	W	13,732	13,732
	RLA	A	27.6	27.6
	LRA	A	197	197
	Refrigerant oil	ml	3,600	3,600
Outdoor coil	Number of rows	\	3+3+3+3	
	Fin spacing	mm	1.5+1.5+1.5+1.5	
	Fin type	\	Hydrophilic aluminum fin	
	Tube diameter	mm	Φ7+Φ7+Φ7+Φ7	
	Tube type	\	Inner grooved copper pipe	

Continued:

Nominal ton		**(Ton)**	**30**
Model			**KRFN1050CFAN3**
Outdoor fan	Type	\	Axial
	Quantity	\	2
	Drive type	\	Direct
	Motor quantity	\	2
	Motor model	\	YS1500-6-2
	Motor capacitor	\	\
	Motor input	W	\
	Fan speed	RPM	910
Refrigerant	Type	\	R410A
	Volume	kg	7.6+7.6
	Control	\	Capillary
Wired controller		\	KWC-22
Centralized controller (Optional)		\	Yes
Ambient temperature (Cooling)		°C	10~52
System stage		\	2
Dimensions	Net (W×H×D)	mm	2,320×1,245×2,220
	Packing (W×H×D)	mm	2,330×1,275×2,230
Weight	Net	kg	910
	Gross	kg	940

Notes:

1. Nominal ton only for reference. Cooling capacity as per specifications;

2. Cooling capacity test condition: (1)

Outdoor ambient temperature: 35°C, indoor temperature: 26.7°CDB, 19.4°CWB;

Cooling capacity test condition: (2)

Outdoor ambient temperature: 46.1°C, indoor temperature: 26.7°CDB, 19.4°CWB;

3. Units are suitable for operation to ±20% of nominal indoor air flow.

4. ESP: external static pressure;

5. Specifications are subject to change without prior notice for product improvement.

3. Dimensions drawings

KRFN220CFAN3, KRFN260CFAN3: (Unit: mm)

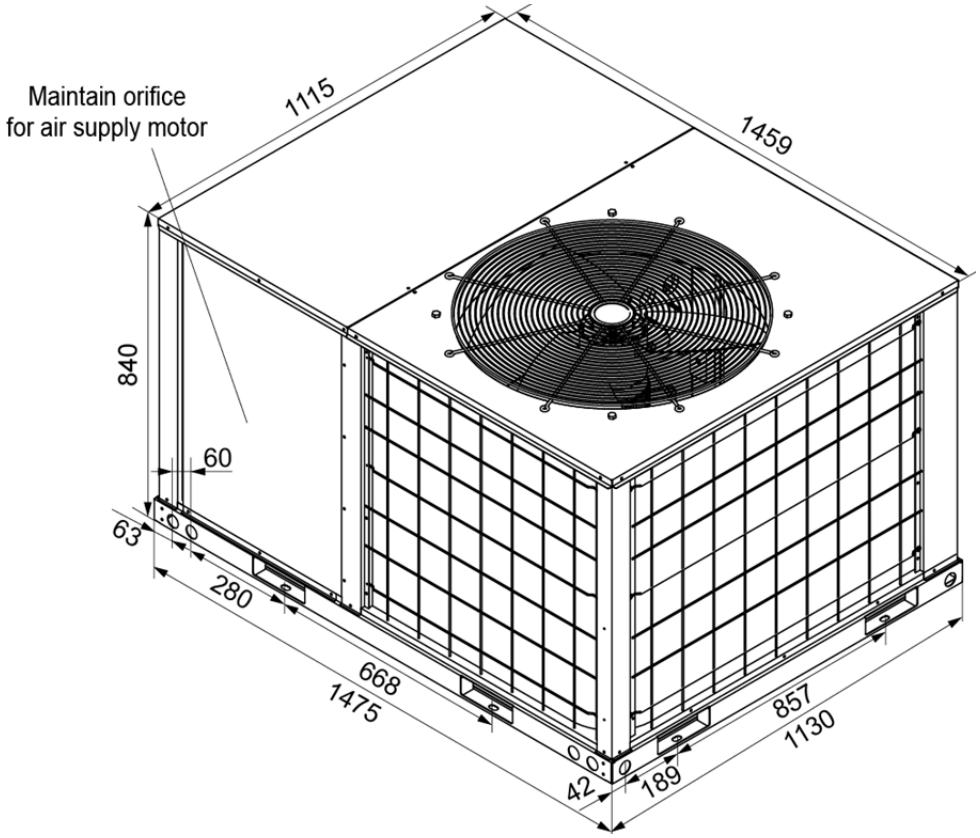

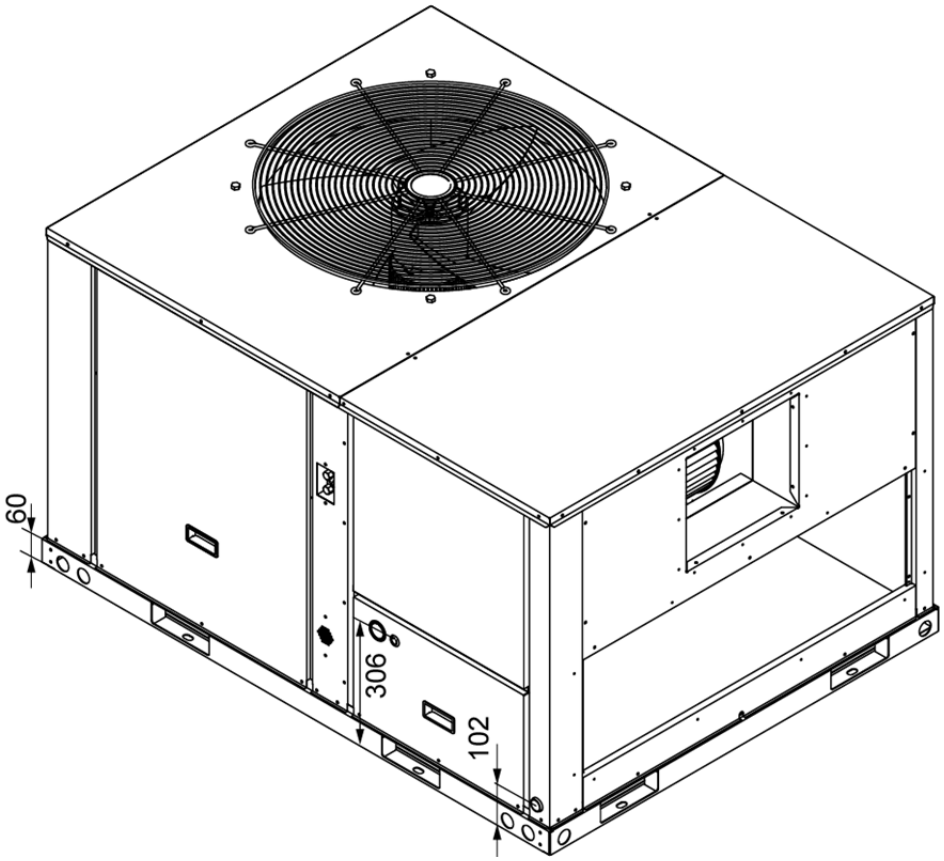
60
306
102

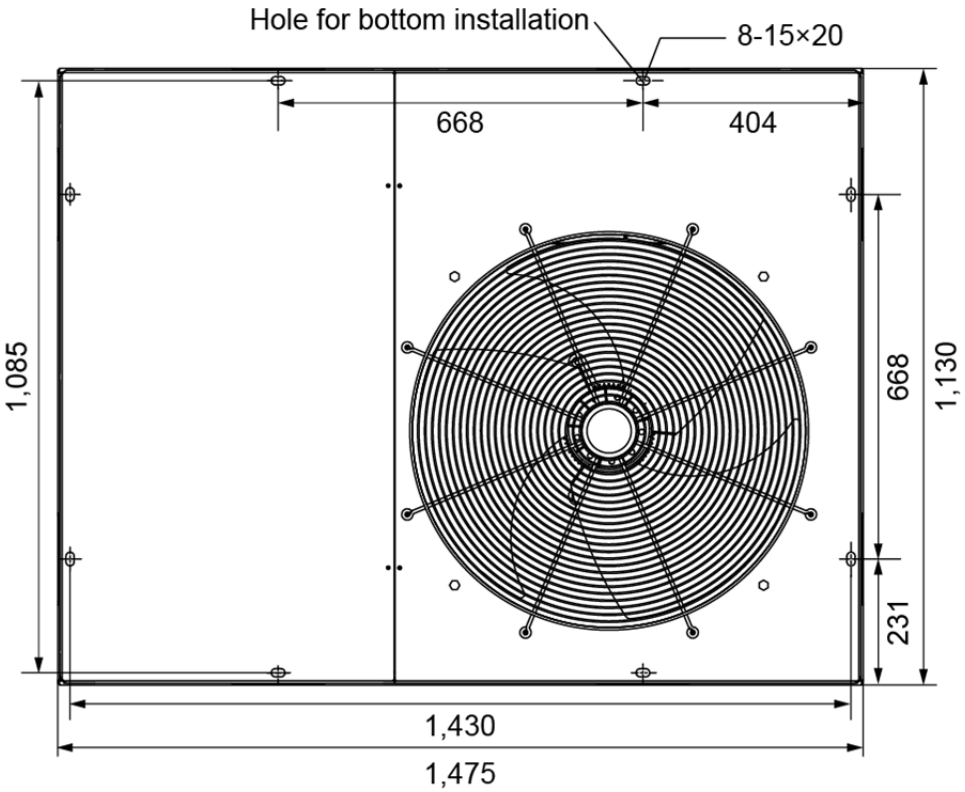
Hole for bottom installation
8-15×20
668
404
1,085
668
1,130
231
1,430
1,475

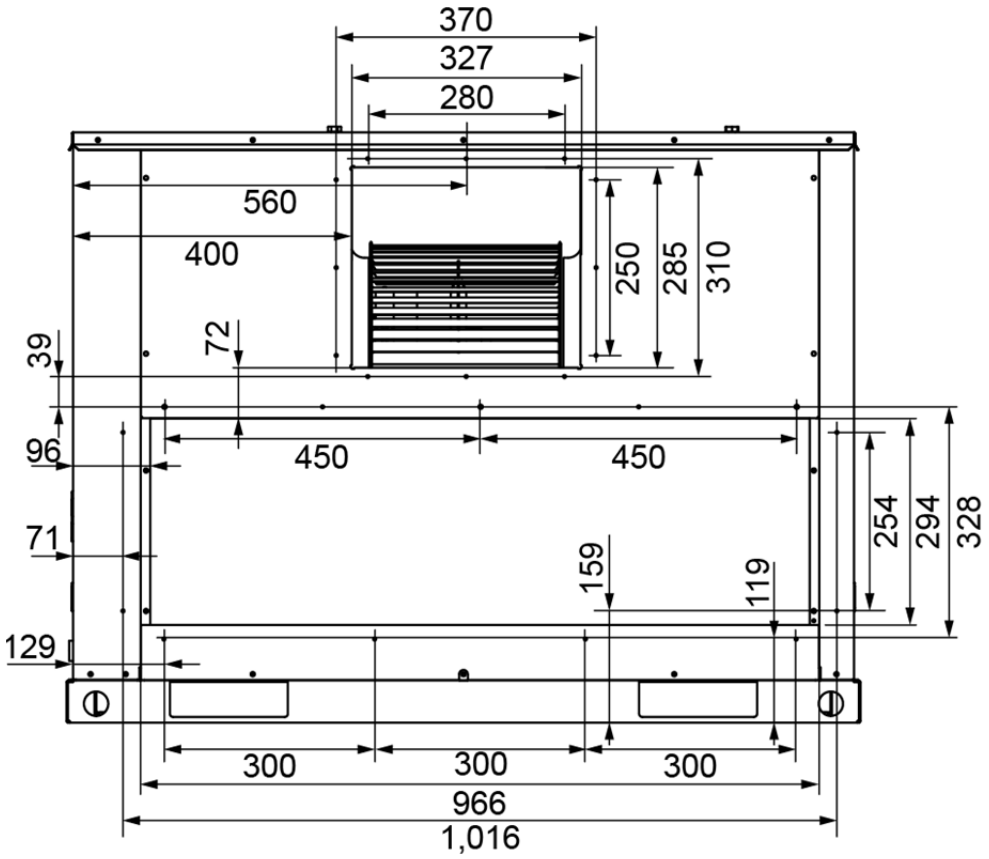
370
327
280
560
400
250
285
310
39
72
96
450
450
71
254
294
328
159
119
129
300
300
300
966
1,016

KRFN300CFAN3, KRFN350CFAN3: (Unit: mm)

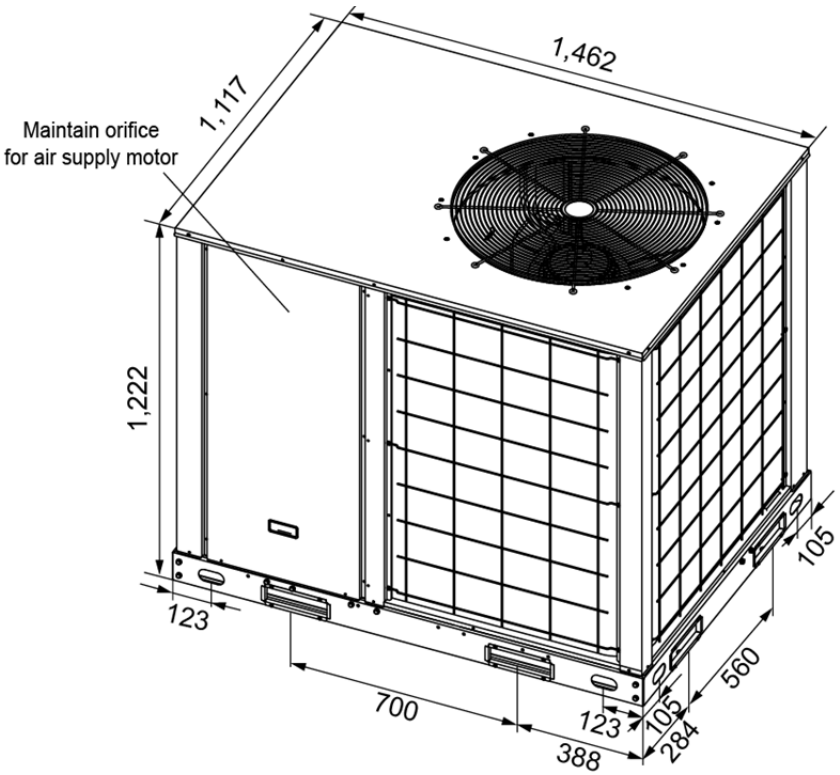

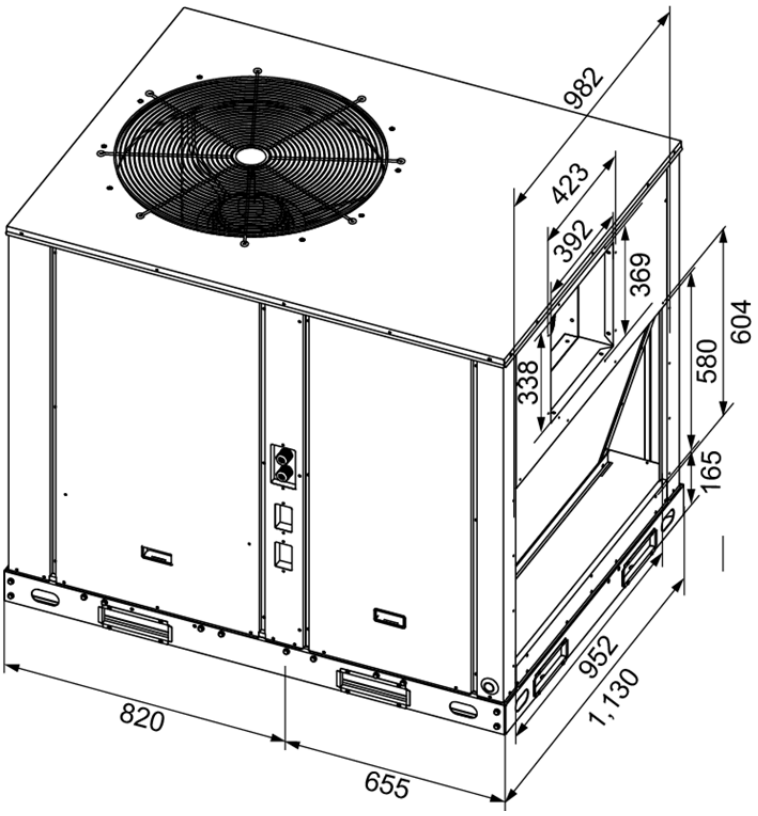

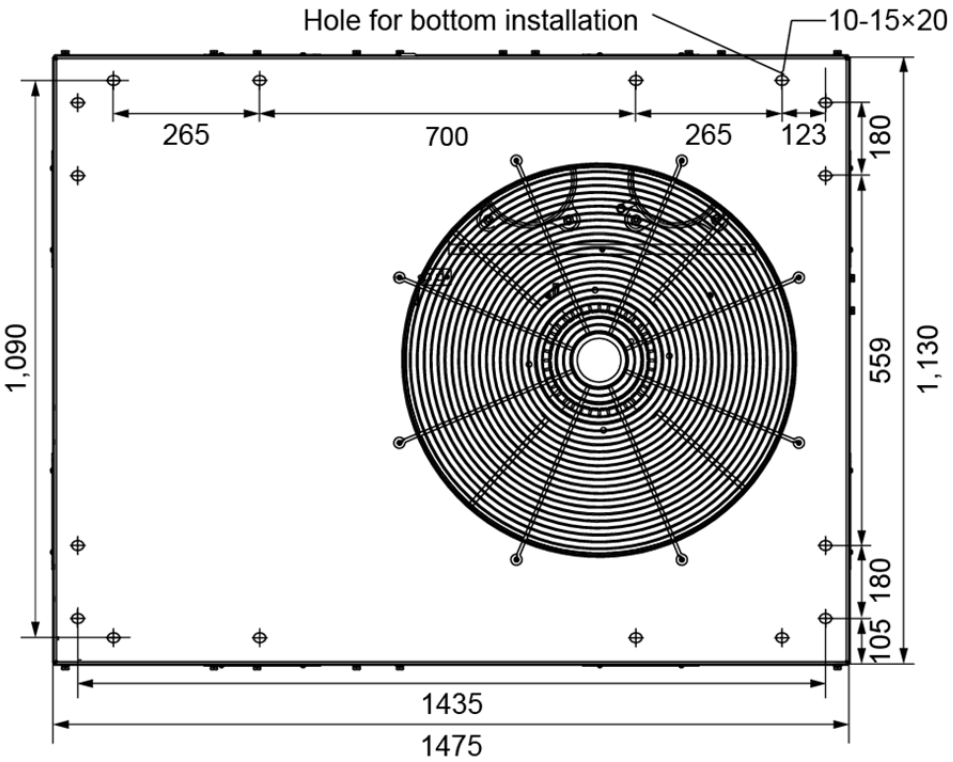
Hole for bottom installation
10-15×20
265
700
265
123
180
1,090
559
1,130
180
105
1435
1475

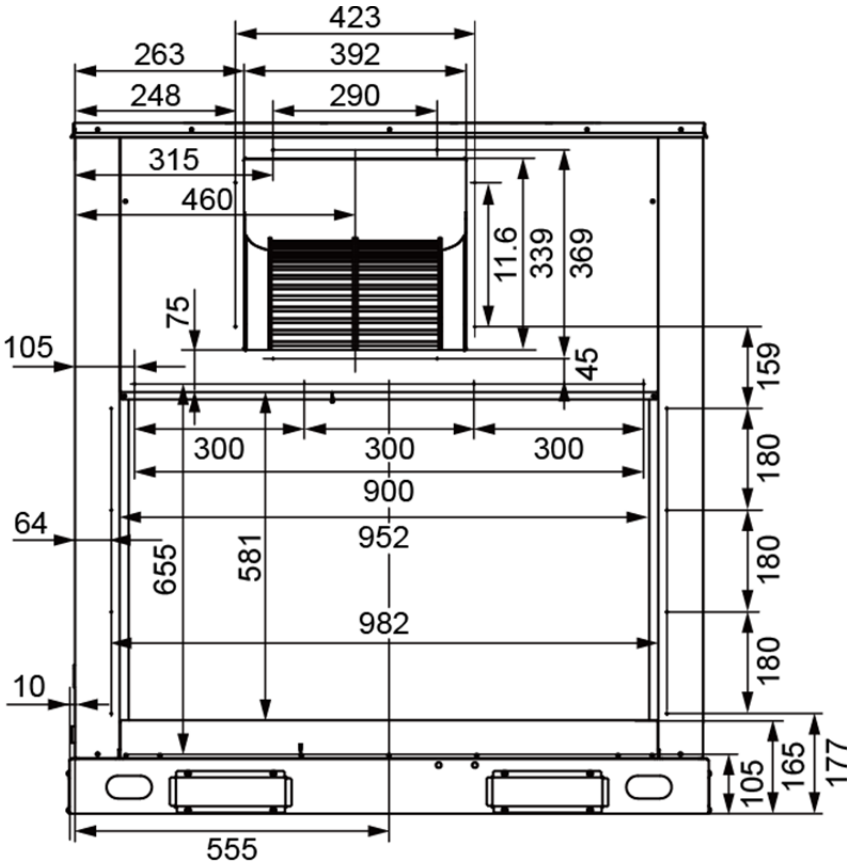
423
263
392
248
290
315
460
11.6
339
369
75
105
45
159
300
300
300
180
900
64
952
655
581
180
982
180
10
105
165
177
555

KRFN440CFAN3, KRFN530CFAN3: (Unit: mm)

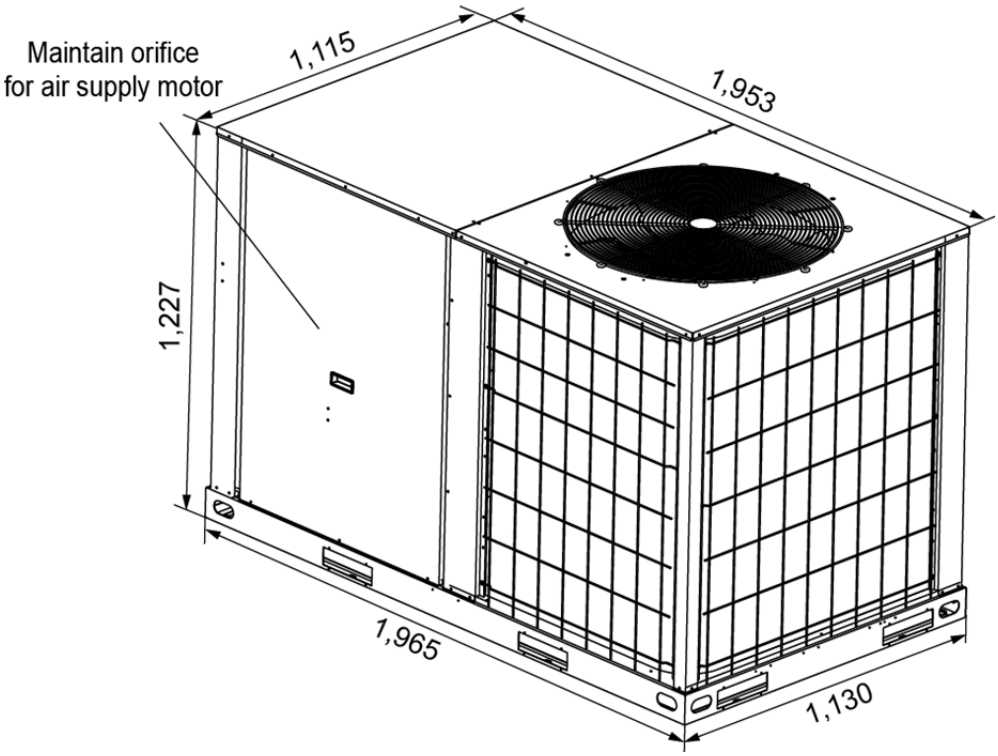

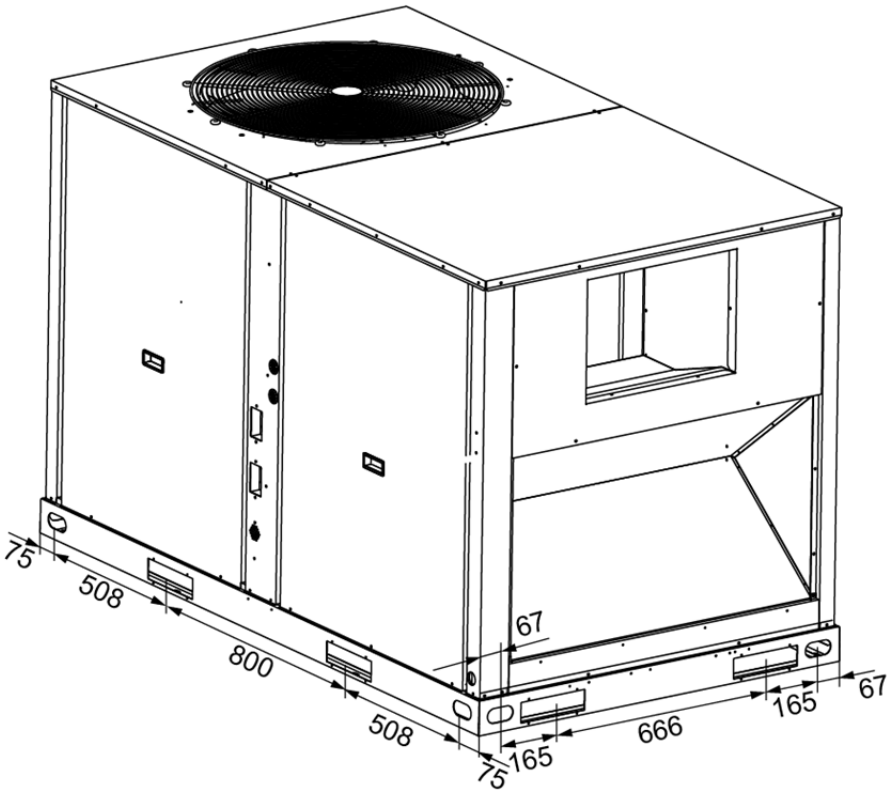

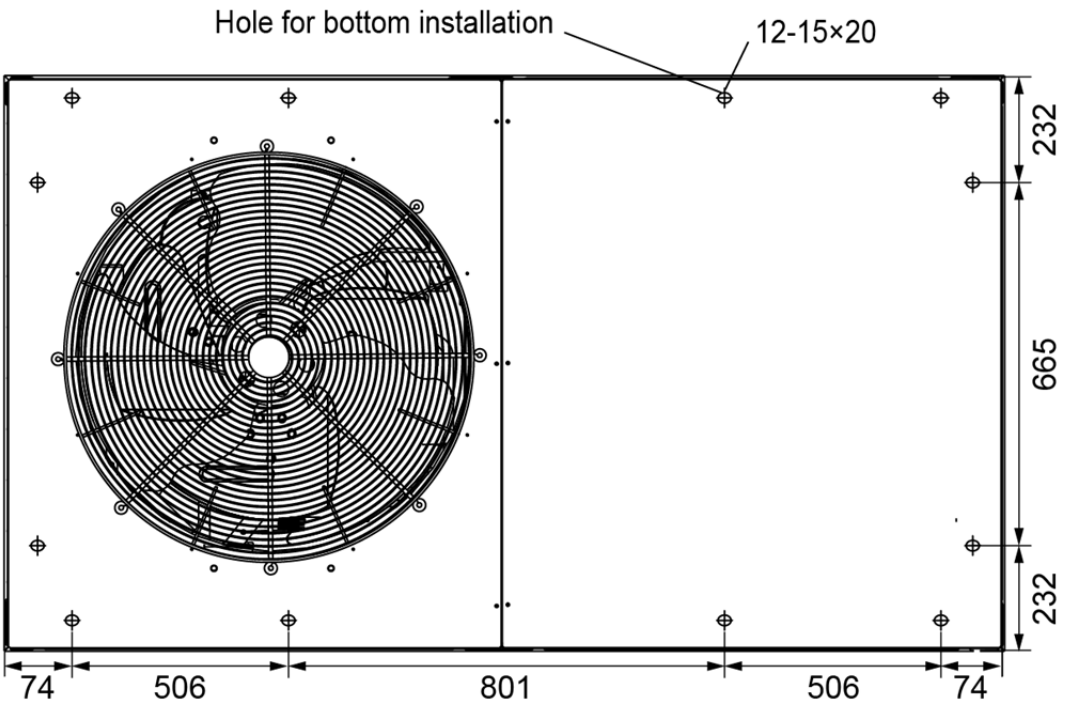
Hole for bottom installation
12-15×20
232
665
232
74
506
801
506
74

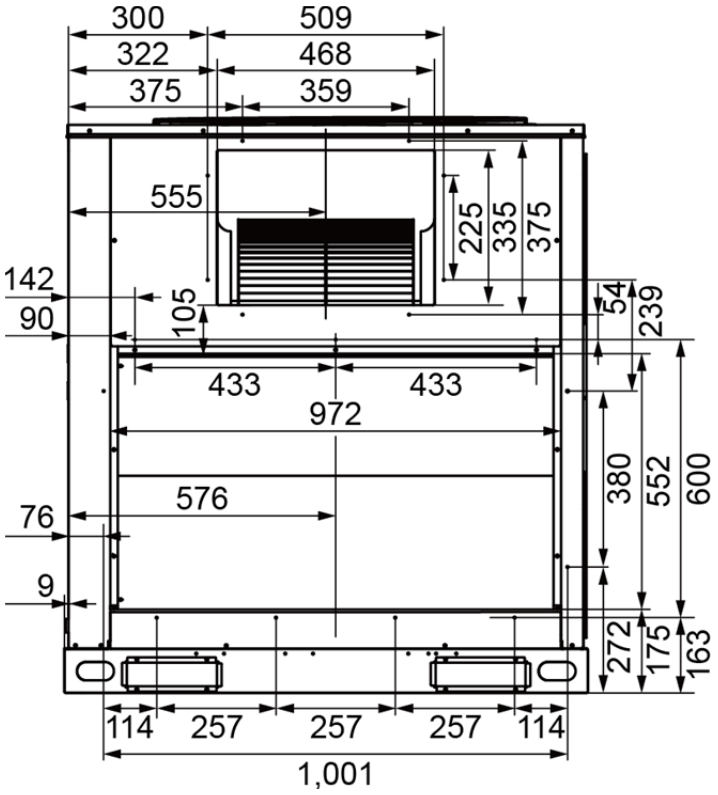
300
509
322
468
375
359
555
225
335
375
142
90
105
54
239
433
433
972
380
552
600
576
76
9
272
175
163
114
257
257
257
114
1,001

KRFN600CFAN3, KRFN700CFAN3: (Unit: mm)

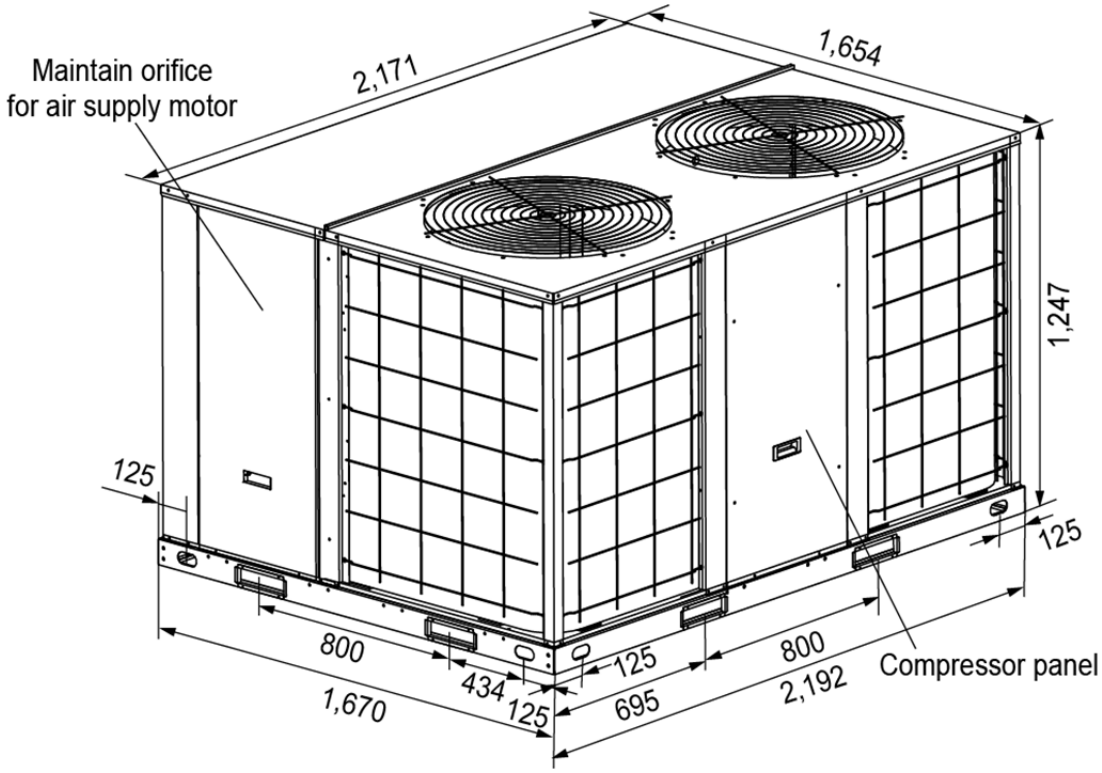

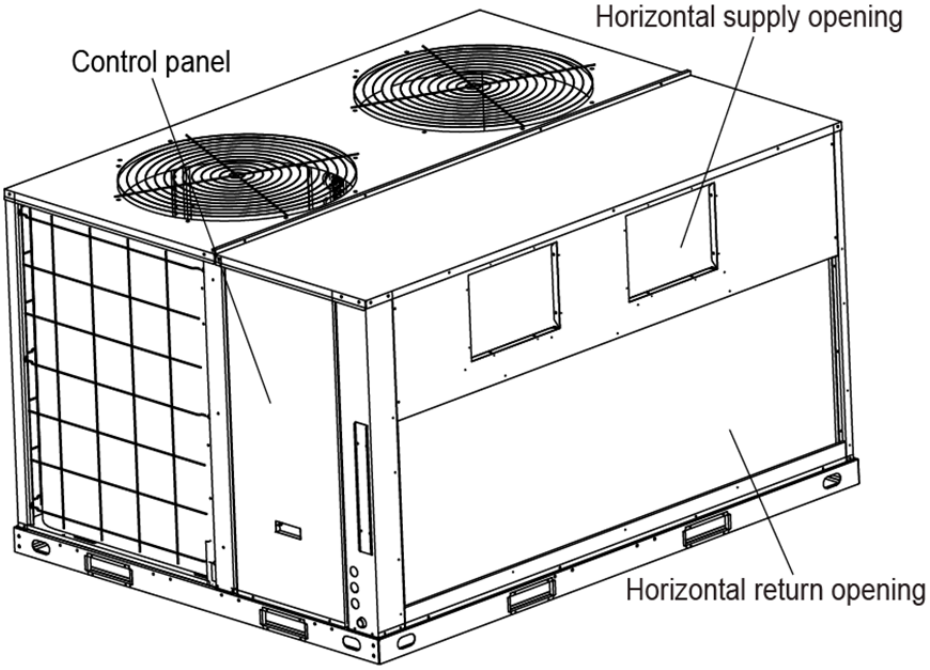

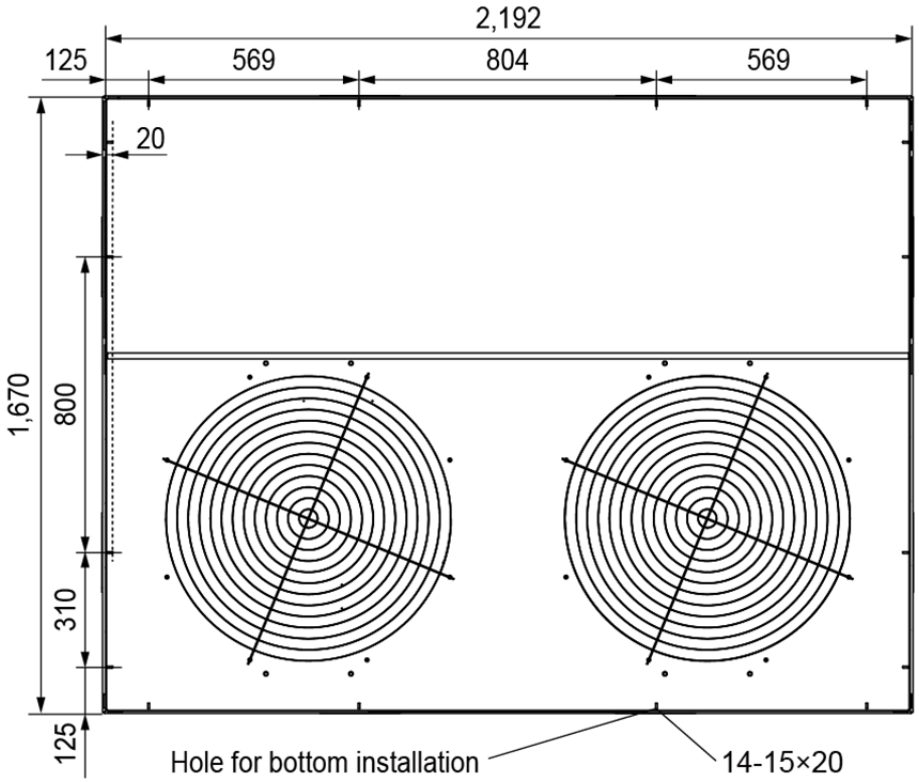
2,192
125
569
804
569
20
1,670
800
310
125
Hole for bottom installation
14-15×20

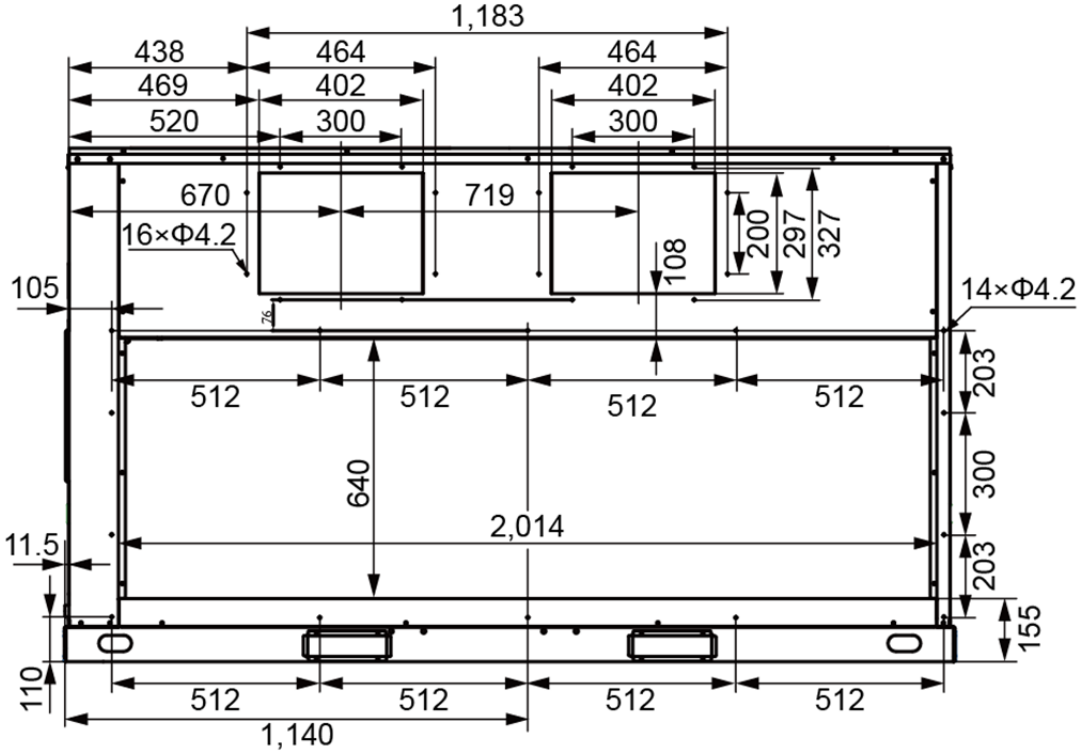
1,183
438
464
464
469
402
402
520
300
300
670
719
16×Φ4.2
200
297
327
108
105
14×Φ4.2
512
512
512
512
203
300
203
155
640
2,014
11.5
110
512
512
512
512
1,140

KRFN880CFAN3, KRFN1050CFAN3: (Unit: mm)

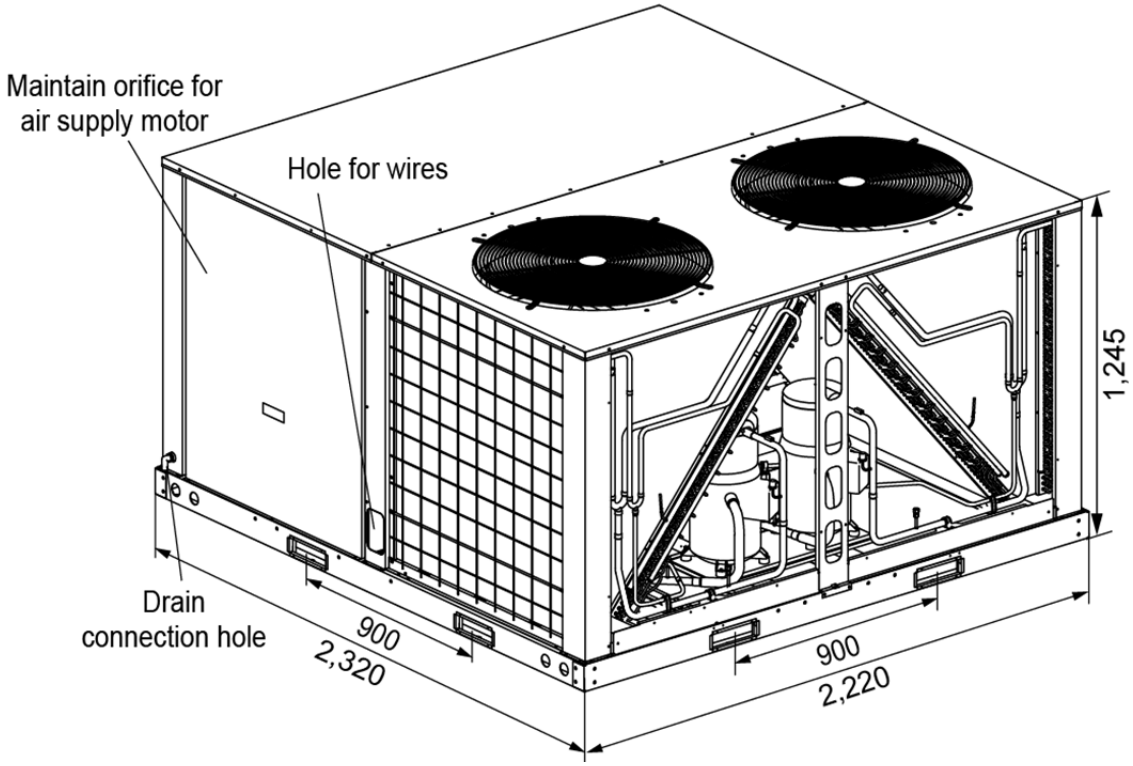

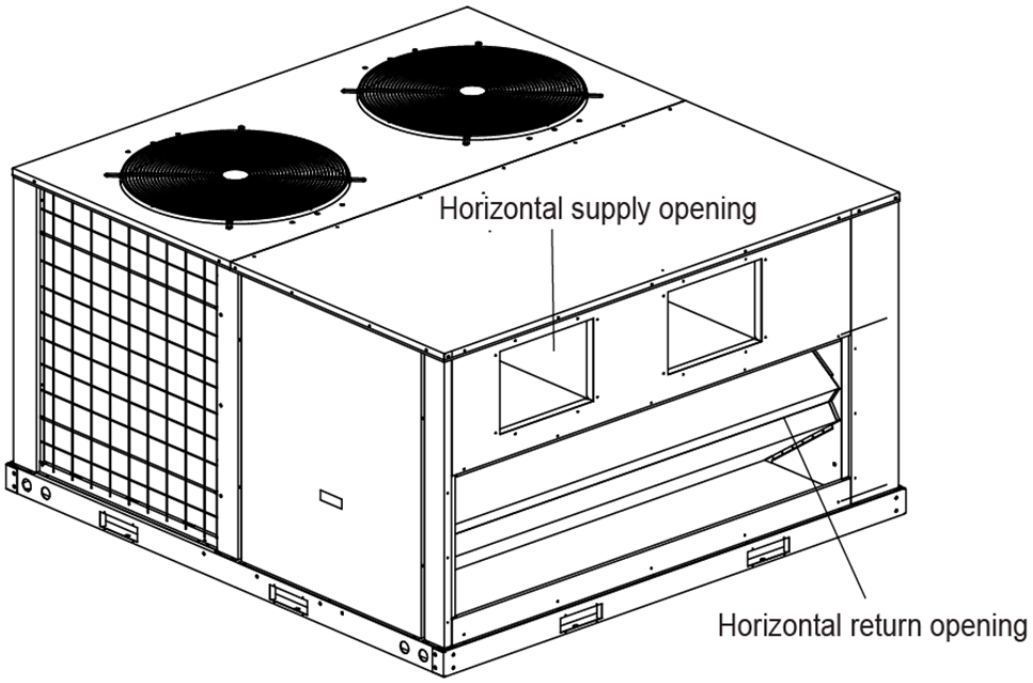

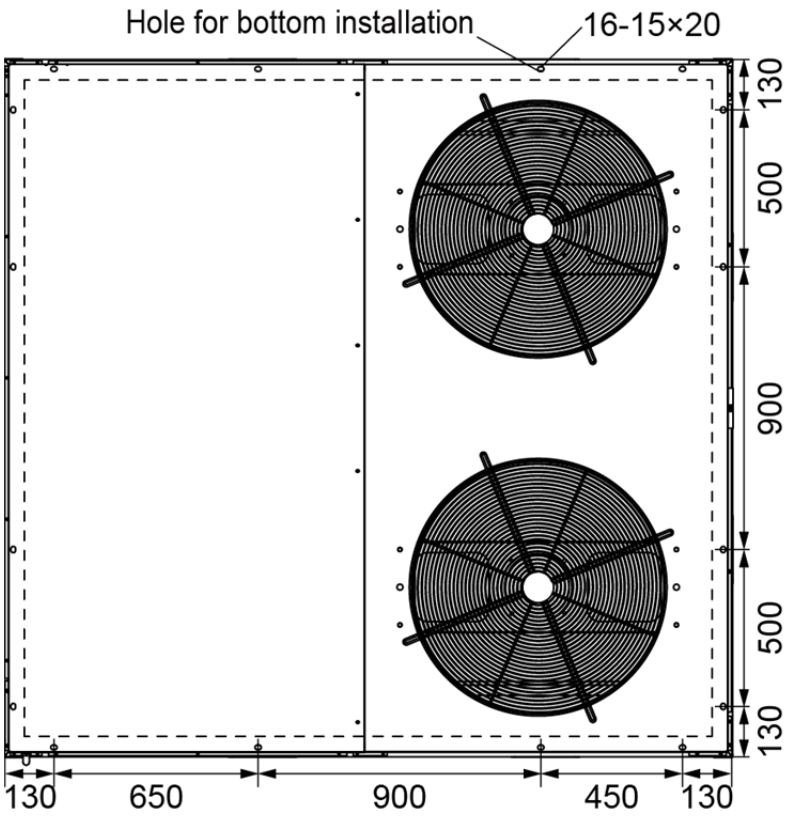
Hole for bottom installation
16-15×20
130
500
900
500
130
130
650
900
450
130

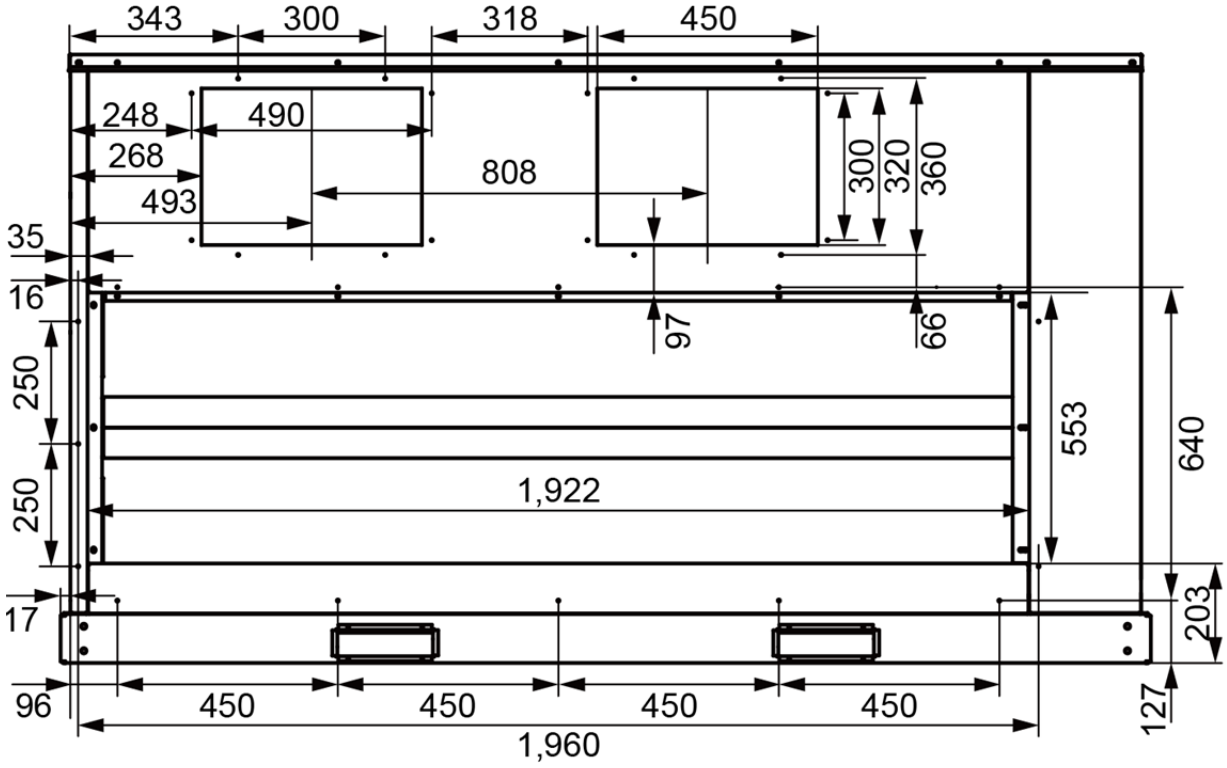
343
300
318
450
248
490
268
493
808
300
320
360
35
16
97
66
250
250
553
640
1,922
17
203
96
450
450
450
450
127
1,960

4. Wiring diagrams

KRFN220CFAN3, KRFN260CFAN3:

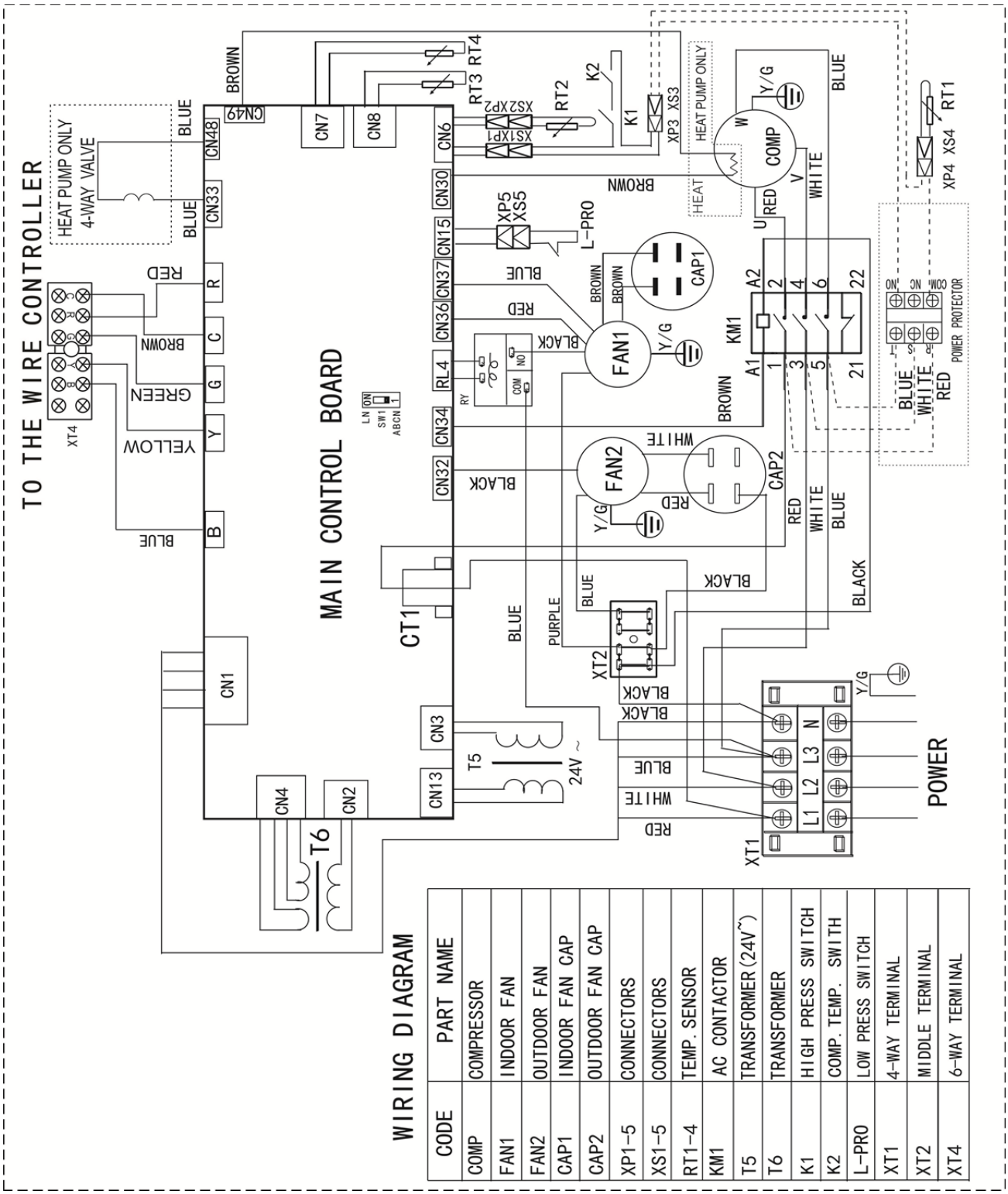

CODE	PART NAME
COMP	COMPRESSOR
FAN1	INDOOR FAN
FAN2	OUTDOOR FAN
CAP1	INDOOR FAN CAP
CAP2	OUTDOOR FAN CAP
XP1-5	CONNECTORS
XS1-5	CONNECTORS
RT1-4	TEMP. SENSOR
KM1	AC CONTACTOR
T5	TRANSFORMER(24V~)
T6	TRANSFORMER
K1	HIGH PRESS SWITCH
K2	COMP. TEMP. SWITH
L-PRO	LOW PRESS SWITCH
XT1	4-WAY TERMINAL
XT2	MIDDLE TERMINAL
XT4	6-WAY TERMINAL

KRFN300CFAN3:

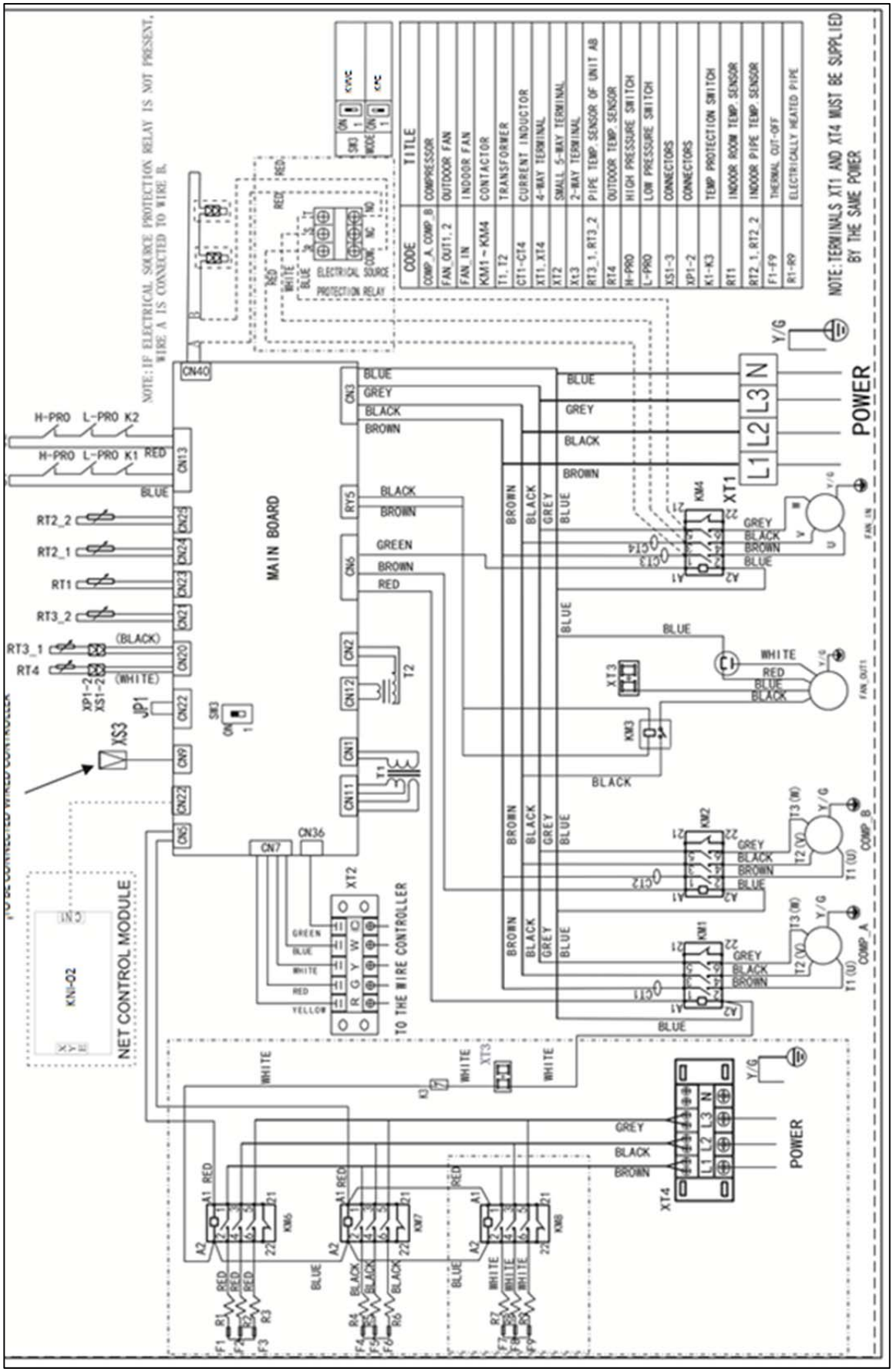

KRFN350CFAN3:

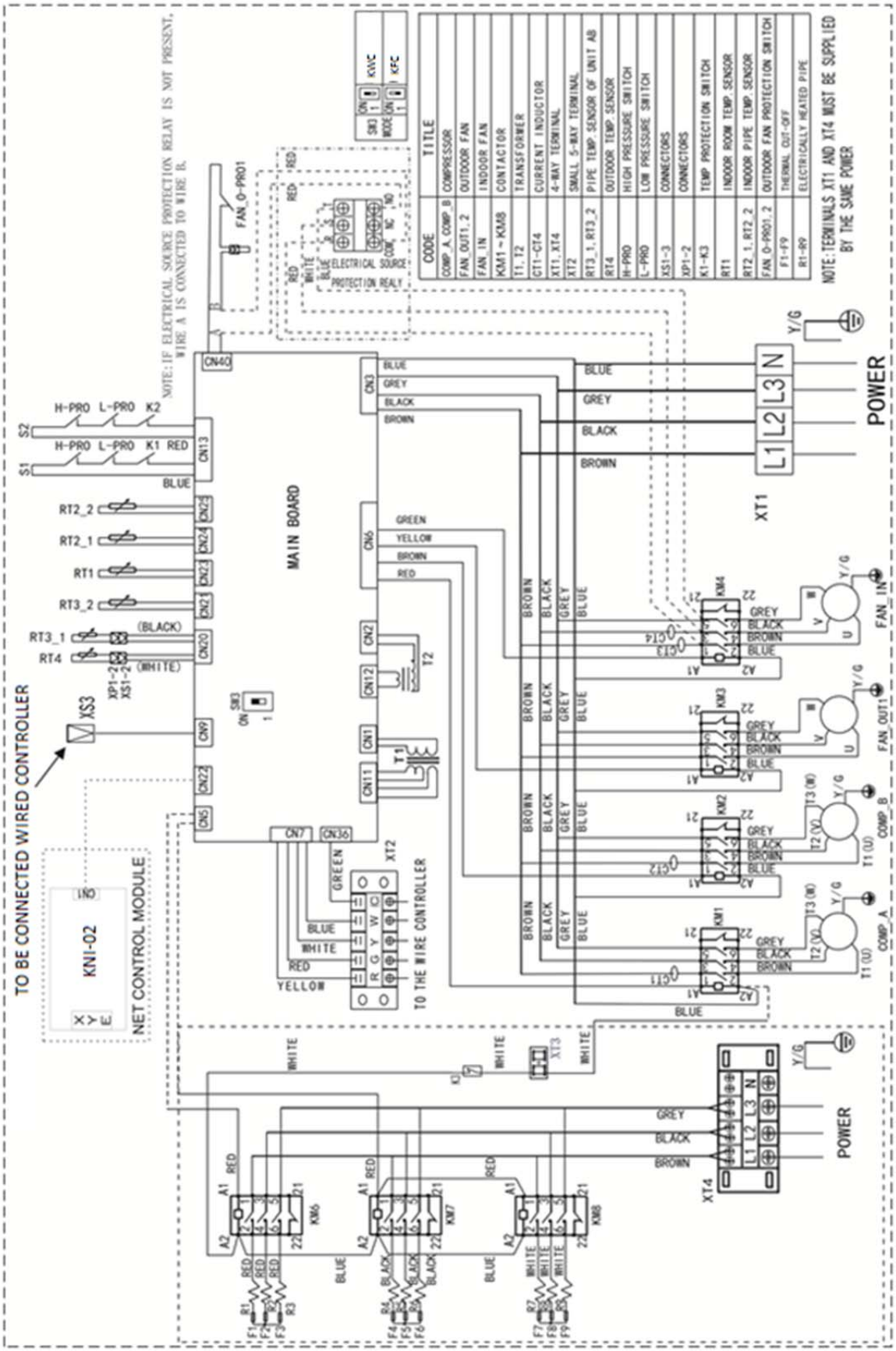

KRFN440CFAN3:

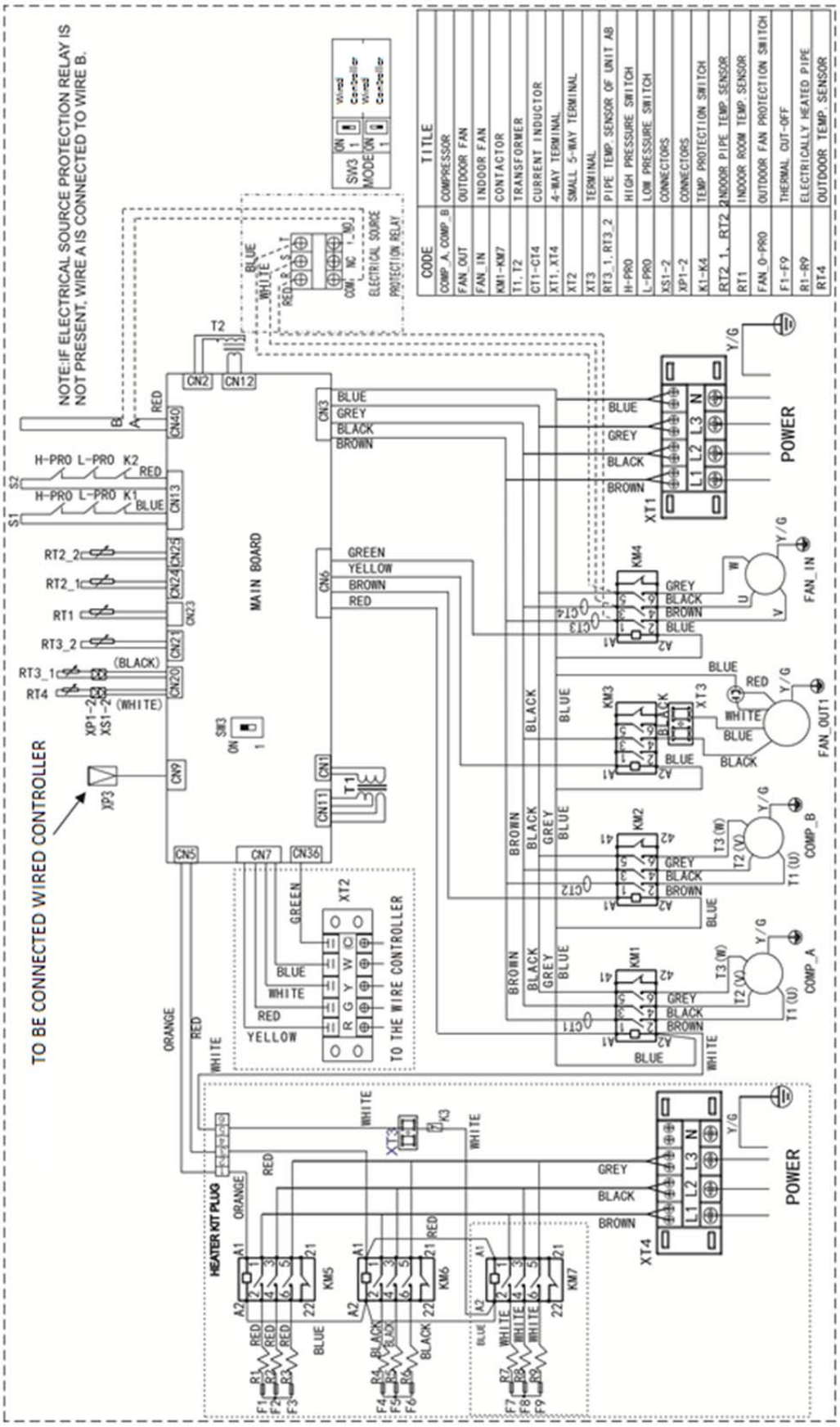

KRFN530CFAN3:

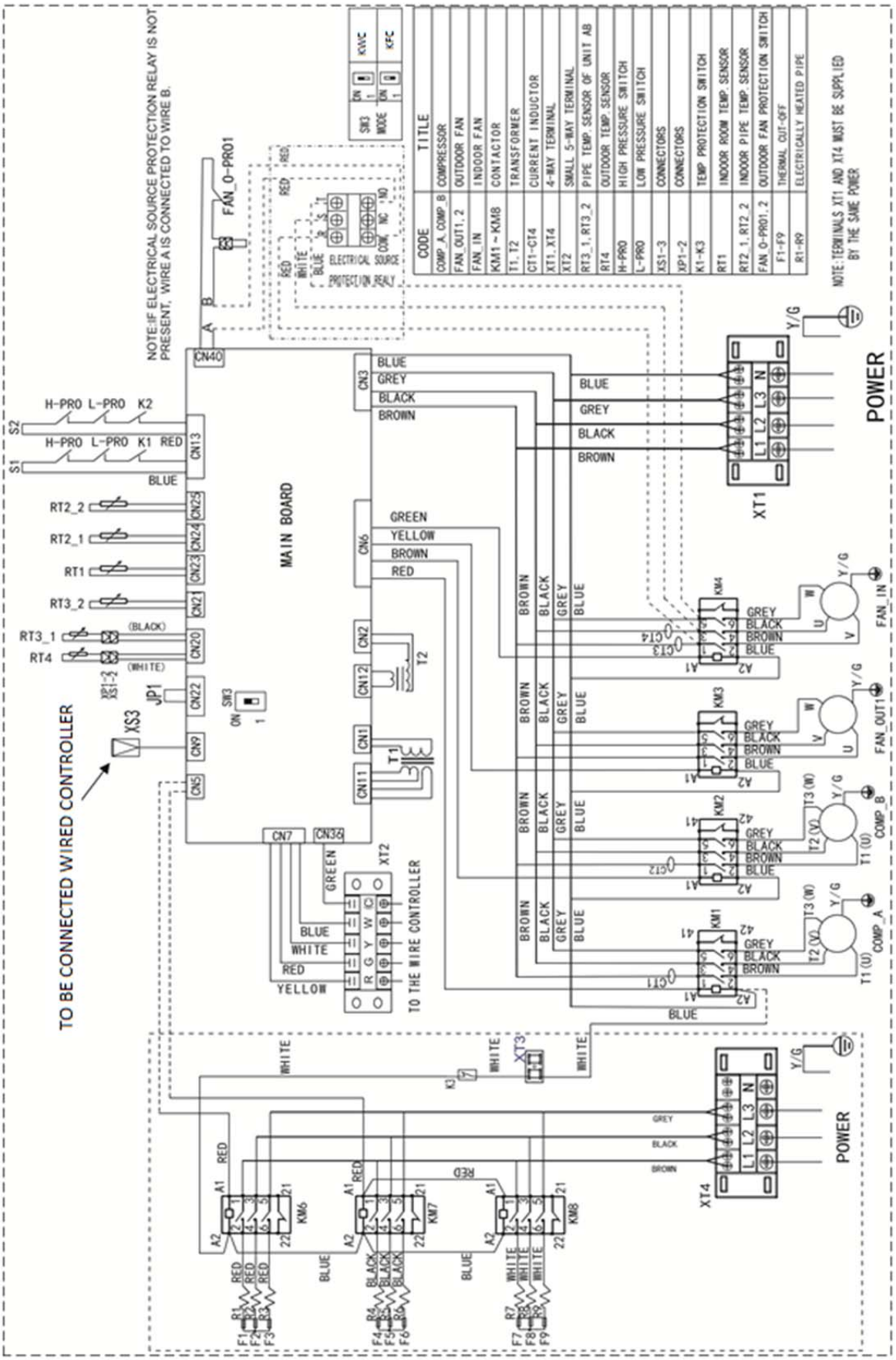

KRFN600CFAN3:

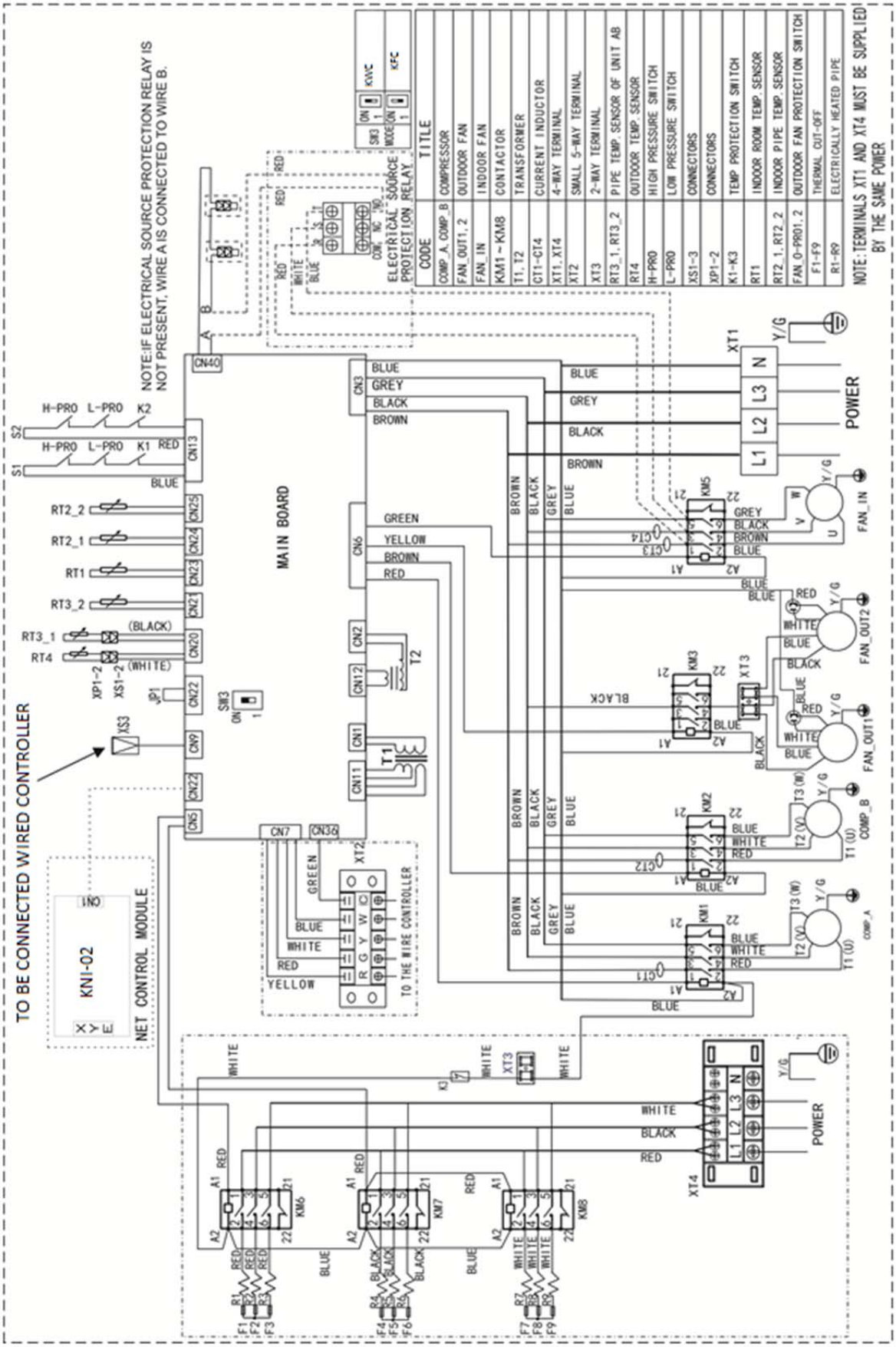

KRFN700CFAN3:

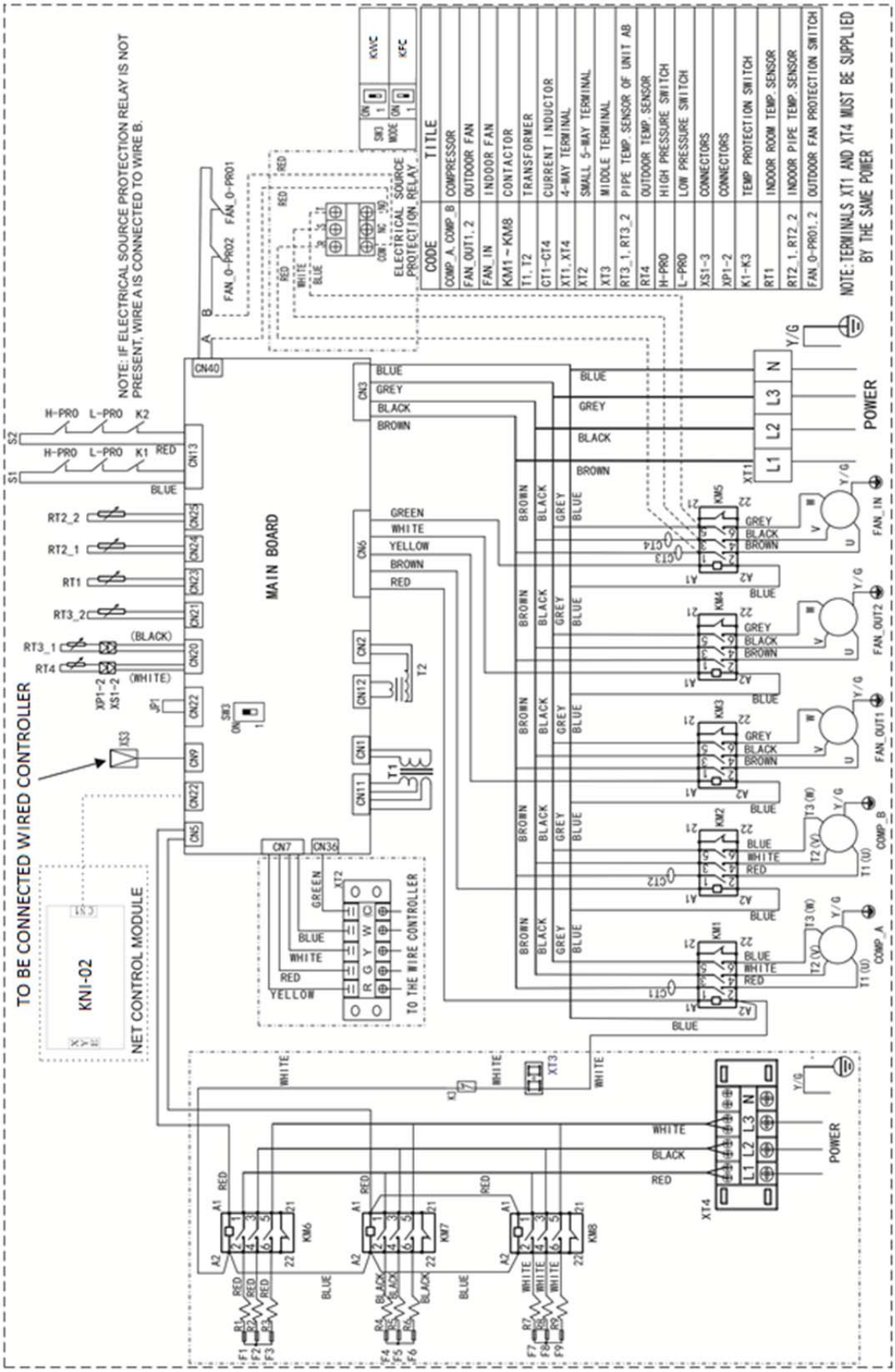

KRFN880CFAN3, KRFN1050CFAN3:

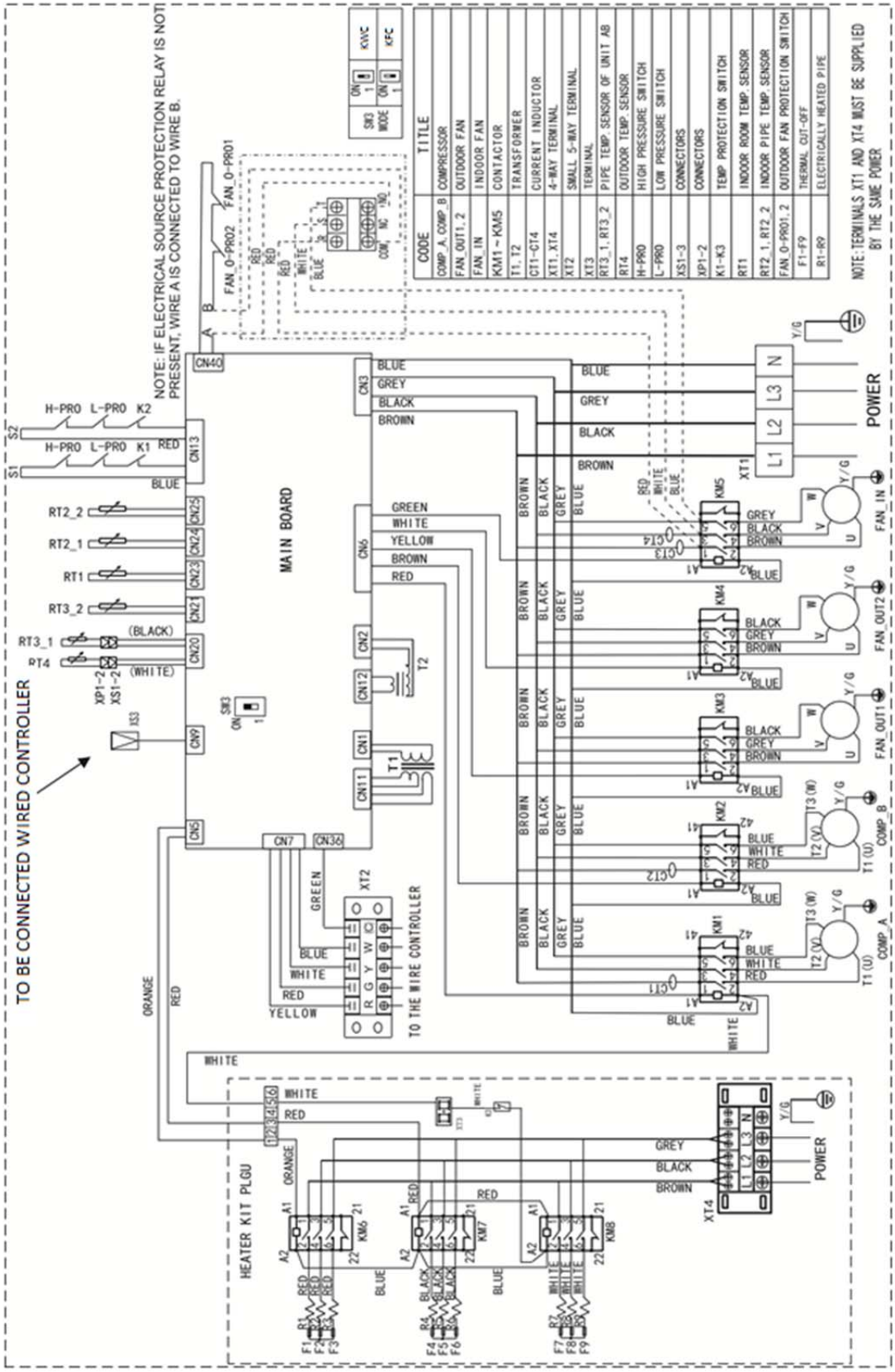

5. Performance data

KRFN220CFAN3

Cooling capacity:

Gross Cooling Capacity																			
Ambient DB(°C)		29.4									35								
Indoor	WB(°C)	16.1			19.4			22.8			16.1			19.4			22.8		
CFM	DB(°C)	TC	SC	PI	TC	SC	PI	TC	SC	PI	TC	SC	PI	TC	SC	PI	TC	SC	PI
2,000	23.9	65.4	57.1	5614.7	75.8	42.6	6170.5	79.0	26.7	7560.1	62.1	54.5	5930.5	68.0	41.2	6189.5	78.4	25.8	7970.3
	26.7	66.8	63.6	5758.7	77.4	53.8	6345.5	80.7	38.8	7760.1	63.5	59.6	6274.9	69.5	52.9	6534.0	80.0	38.1	8220.3
	29.4	68.2	67.8	6011.6	79.0	64.8	6783.1	82.4	48.1	8110.1	64.8	61.6	6705.8	71.0	64.6	6970.9	81.7	48.3	8728.0
	32.2	69.6	69.6	6299.6	80.7	75.4	7133.1	84.1	56.9	8504.1	66.2	64.5	6999.8	72.4	68.5	7302.8	83.4	58.6	9128.0
2,800	23.9	69.5	61.1	5904.0	76.7	44.7	6236.8	79.5	27.2	7596.3	64.1	56.8	6219.8	69.3	43.2	6255.8	78.8	26.2	8000.4
	26.7	70.9	66.9	6048.0	78.4	57.0	6411.8	81.2	38.5	7796.3	65.5	62.1	6564.2	75.0	56.1	6600.3	80.5	38.9	8250.4
	29.4	72.4	70.2	6313.0	80.0	67.9	6855.4	82.9	48.3	8146.3	66.9	64.3	7007.2	77.3	68.8	7043.2	82.2	49.8	8758.1
	32.2	74.0	72.7	6606.9	81.7	77.1	7205.4	84.6	59.1	8540.3	68.4	67.8	7307.2	78.5	72.9	7375.1	83.9	61.0	9158.1
3,600	23.9	71.2	65.0	6024.5	77.4	45.9	6285.0	79.7	27.6	7608.3	66.1	59.2	6340.3	72.9	45.3	6515.0	79.1	26.7	8024.5
	26.7	72.7	67.1	6174.5	79.0	58.0	6460.0	81.4	42.0	7808.3	67.5	62.7	6690.8	77.1	59.1	6740.0	80.8	39.6	8274.5
	29.4	74.2	70.0	6439.5	80.7	70.2	6903.6	83.1	49.2	8158.3	69.0	66.3	7133.7	78.6	72.4	7133.6	82.5	51.1	8782.3
	32.2	75.8	73.7	6739.5	82.4	80.3	7253.6	84.9	59.4	8558.3	70.4	69.0	7439.8	80.0	73.4	7483.6	84.2	62.6	9182.3

Notes:

1. All capacities are gross and have not considered indoor fan heat. To obtain net cooling capacity subtract indoor fan heat;

2. TC = Total Capacity (Unit: 1,000Btu/h); SC = Sensible Capacity (Unit: 1,000Btu/h).

KRFN220CFAN3

Cooling capacity: (Continued)

Gross Cooling Capacity																			
Ambient DB(°C)		40.6									46.1								
Indoor	WB(°C)	16.1			19.4			22.8			16.1			19.4			22.8		
CFM	DB(°C)	TC	SC	PI	TC	SC	PI	TC	SC	PI	TC	SC	PI	TC	SC	PI	TC	SC	PI
2,000	23.9	56.6	51.8	6506.2	67.0	38.8	6690.0	76.2	24.5	8597.9	48.9	47.1	7093.2	58.5	34.0	7380.9	70.4	21.0	8840.8
	26.7	57.8	53.4	6735.2	68.5	50.6	6934.0	77.8	37.0	8877.9	50.0	48.3	7337.2	59.8	46.1	7649.8	72.0	32.8	9134.8
	29.4	59.1	55.9	7112.8	69.9	62.6	7317.6	79.5	49.9	9485.7	51.1	49.8	7561.1	61.1	57.4	8033.5	73.6	45.4	9742.5
	32.2	60.3	57.5	7406.7	71.4	68.6	7661.6	81.1	60.6	9879.6	52.2	51.6	7855.1	62.5	61.5	8377.4	75.2	58.2	10142.5
2,800	23.9	58.6	55.8	6644.8	68.6	41.0	6804.5	76.2	24.5	8591.9	50.5	45.4	7207.7	60.0	36.3	7489.4	66.4	21.5	8551.5
	26.7	59.8	56.9	6879.8	70.1	51.6	7048.5	77.8	38.2	8871.9	51.6	48.0	7451.7	61.4	49.4	7764.4	67.8	34.6	8839.5
	29.4	61.1	60.2	7257.4	71.6	67.5	7438.1	79.4	51.1	9473.6	52.7	50.8	7681.7	62.7	59.9	8148.0	69.3	47.3	9441.2
	32.2	62.4	61.9	7557.4	73.1	72.0	7782.1	81.1	62.3	9873.6	53.9	52.1	7975.6	64.1	63.1	8491.9	70.9	59.7	9835.2
3,600	23.9	60.3	59.3	6771.4	69.9	43.2	6894.9	77.4	25.6	8682.3	52.7	50.5	7364.4	61.4	38.5	7585.8	72.2	22.1	8967.4
	26.7	61.6	60.3	7006.4	71.4	57.6	7144.9	79.0	39.8	8962.3	53.8	52.1	7614.4	62.7	53.0	7860.8	73.8	39.2	9267.4
	29.4	63.0	61.5	7360.0	72.9	72.3	7528.5	80.7	52.5	9570.0	55.0	53.7	7844.4	64.1	58.1	8244.4	75.4	50.0	9875.1
	32.2	64.3	63.6	7690.0	74.5	73.7	7878.5	82.4	64.1	9970.0	56.3	55.5	8144.4	65.5	65.2	8594.4	77.0	63.2	10275.1

Notes:

1. All capacities are gross and have not considered indoor fan heat. To obtain net cooling capacity subtract indoor fan heat;

2. TC = Total Capacity (Unit: 1,000Btu/h); SC = Sensible Capacity (Unit: 1,000Btu/h).

KRFN220CFAN3

Cooling capacity: (Continued)

Gross Cooling Capacity																			
Ambient DB(°C)		48									51.7								
Indoor	WB(°C)	16.1			19.4			22.8			16.1			19.4			22.8		
CFM	DB(°C)	TC	SC	PI	TC	SC	PI	TC	SC	PI	TC	SC	PI	TC	SC	PI	TC	SC	PI
2,000	23.9	47.1	45.3	7423.2	58.1	33.6	7416.5	68.6	19.2	9396.0	44.3	42.7	7922.3	53.2	30.7	7784.9	64.1	18.7	10013.3
	26.7	48.2	46.5	7667.2	59.4	45.7	7685.5	70.2	31.0	9740.0	45.3	43.8	8191.3	54.4	41.8	8078.9	65.5	29.6	10413.3
	29.4	49.3	48.0	8011.1	60.7	57.0	8078.0	71.8	43.6	10347.7	46.3	45.1	8535.2	55.5	52.2	8516.4	67.0	41.1	11050.0
	32.2	50.4	49.8	8305.1	62.1	61.1	8423.0	73.4	56.4	10747.7	47.4	46.8	8829.2	56.8	55.9	8866.4	68.4	52.9	11450.0
2,800	23.9	48.7	43.6	7537.7	59.6	35.9	7525.0	64.6	19.7	9106.7	45.8	41.1	8030.8	54.5	32.8	7881.3	60.4	19.2	9748.1
	26.7	49.8	46.2	7781.7	60.5	48.9	7800.0	66.0	32.8	9444.7	46.8	43.5	8299.8	55.8	44.9	8181.3	61.7	31.2	10142.1
	29.4	50.9	49.0	8131.7	62.3	59.5	8192.5	67.5	45.5	10046.4	47.8	46.1	8643.7	57.0	54.4	8618.9	63.1	42.9	10772.8
	32.2	52.1	50.3	8425.6	63.7	62.7	8537.6	69.1	57.9	10440.4	48.9	47.2	8937.7	58.2	57.3	8968.9	64.4	54.3	11166.7
3,600	23.9	50.9	48.7	7694.4	61.0	38.1	7621.4	70.4	20.3	9522.6	47.8	45.8	8169.4	55.8	34.8	7971.7	65.7	19.7	10127.8
	26.7	52.0	50.3	7944.4	62.3	52.6	7896.4	72.0	34.4	9872.6	48.9	47.2	8444.4	57.1	48.1	8271.7	67.1	32.7	10527.8
	29.4	53.2	51.9	8294.4	63.7	59.2	8290.0	73.6	48.2	10480.3	50.0	48.7	8794.4	58.3	57.3	8715.3	68.7	45.3	11170.5
	32.2	54.5	53.7	8594.4	65.1	64.8	8640.0	75.2	61.4	10880.3	51.1	50.5	9094.4	59.6	59.3	9065.3	70.1	57.5	11570.5

Notes:

1. All capacities are gross and have not considered indoor fan heat. To obtain net cooling capacity subtract indoor fan heat;

2. TC = Total Capacity (Unit: 1,000Btu/h); SC = Sensible Capacity (Unit: 1,000Btu/h).

KRFN260CFAN3

Cooling capacity:

Gross Cooling Capacity																			
Ambient DB(°C)		29.4									35								
Indoor	WB(°C)	16.1			19.4			22.8			16.1			19.4			22.8		
CFM	DB(°C)	TC	SC	PI	TC	SC	PI	TC	SC	PI	TC	SC	PI	TC	SC	PI	TC	SC	PI
2,100	23.9	77.6	67.8	7012.8	89.9	50.7	7460.0	93.7	31.9	8494.4	73.7	64.7	7576.0	80.7	49.0	7882.8	92.9	30.8	8930.9
	26.7	79.4	75.6	7157.9	91.9	64.0	7635.1	95.8	46.2	8694.5	75.4	70.8	7756.1	82.5	62.9	8085.4	95.0	45.4	9181.0
	29.4	81.1	80.6	7413.1	93.9	77.1	8045.9	97.9	57.3	9044.6	77.1	73.3	8016.3	84.4	76.9	8425.9	97.1	57.6	9656.6
	32.2	82.9	81.5	7703.3	96.0	89.7	8396.0	100.0	67.8	9439.8	78.8	76.8	8311.4	86.2	81.6	8776.0	99.2	69.9	10056.7
2,830	23.9	82.4	72.5	7250.1	91.0	53.1	7514.3	94.3	32.4	8524.1	76.1	67.4	7694.6	82.2	51.4	7883.0	93.4	31.3	8955.7
	26.7	84.2	79.5	7395.2	93.0	67.8	7689.4	96.4	45.9	8724.2	77.8	73.8	7874.8	89.0	66.6	7900.2	95.5	46.4	9205.8
	29.4	86.1	83.5	7660.3	95.1	80.7	8105.3	98.5	57.6	9074.3	79.6	76.5	8139.9	91.9	81.8	8300.7	97.6	59.4	9681.4
	32.2	88.0	86.5	7955.5	97.2	91.7	8455.4	100.6	70.5	9469.4	81.4	80.7	8440.0	93.4	86.7	8635.9	99.7	72.7	10081.5
3,800	23.9	84.4	77.1	7348.9	91.8	54.6	7553.9	94.5	32.9	8534.0	78.4	70.3	7808.3	86.5	53.8	7964.5	93.8	31.9	8975.4
	26.7	86.3	79.7	7499.0	93.8	69.0	7729.0	96.6	50.0	8734.1	80.2	74.5	7993.4	91.4	70.2	8153.3	95.9	47.2	9225.5
	29.4	88.2	83.2	7764.1	95.9	83.5	8144.8	98.7	58.6	9084.2	82.0	78.8	8258.5	93.4	86.1	8314.8	98.0	60.9	9701.1
	32.2	90.2	87.7	8064.2	98.0	95.5	8494.9	100.9	70.8	9484.3	83.8	82.1	8558.6	95.2	87.4	8724.9	100.1	74.6	10101.2

Notes:

1. All capacities are gross and have not considered indoor fan heat. To obtain net cooling capacity subtract indoor fan heat;

2. TC = Total Capacity (Unit: 1,000Btu/h); SC = Sensible Capacity (Unit: 1,000Btu/h).

KRFN260CFAN3

Cooling capacity: (Continued)

Gross Cooling Capacity																			
Ambient DB(°C)		40.6									46.1								
Indoor	WB(°C)	16.1			19.4			22.8			16.1			19.4			22.8		
CFM	DB(°C)	TC	SC	PI	TC	SC	PI	TC	SC	PI	TC	SC	PI	TC	SC	PI	TC	SC	PI
2,100	23.9	67.2	61.5	7750.7	79.5	46.1	7917.1	90.4	29.3	9650.3	54.7	52.6	8307.4	66.1	37.2	8611.1	80.2	21.8	9121.5
	26.7	68.7	63.5	7980.8	81.3	60.2	8162.3	92.4	44.1	9930.4	56.1	54.1	8552.6	67.7	51.6	8881.2	82.1	35.8	10016.7
	29.4	70.3	66.6	8331.7	83.1	74.5	8518.1	94.5	59.5	10506.0	57.5	56.0	8777.7	69.4	65.0	9237.1	84.1	50.8	10592.2
	32.2	71.9	68.6	8626.8	85.0	81.7	8863.2	96.5	72.2	10901.1	59.0	58.3	9072.9	71.1	69.9	9582.2	86.1	66.1	10992.2
2,830	23.9	69.5	66.3	7864.4	81.4	48.8	8011.0	90.3	29.2	9645.3	56.6	50.6	8401.4	67.9	39.9	8700.1	75.4	22.4	9484.2
	26.7	71.1	67.6	8099.5	83.2	61.4	8256.2	92.3	45.6	9925.4	58.0	53.8	8646.5	69.6	55.5	8975.2	77.2	37.9	9774.4
	29.4	72.7	71.6	8450.3	85.1	80.3	8617.0	94.3	60.9	10496.1	59.5	57.2	8876.6	71.3	67.9	9331.0	79.1	53.1	10345.1
	32.2	74.4	73.8	8750.4	87.0	85.7	8962.1	96.4	74.2	10896.2	61.0	58.8	9171.8	73.0	71.8	9676.2	81.0	67.8	10740.2
3,800	23.9	71.6	70.4	7968.2	82.9	51.4	8085.2	91.8	30.5	9719.5	59.2	56.7	8529.9	69.5	42.5	8779.2	82.3	23.1	9825.3
	26.7	73.2	71.7	8203.3	84.8	68.5	8335.3	93.8	47.4	9999.6	60.7	58.6	8780.0	71.2	59.7	9054.3	84.3	39.9	10125.4
	29.4	74.9	73.2	8559.1	86.6	85.9	8691.1	95.9	62.5	10575.2	62.2	60.6	9010.1	72.9	71.7	9410.1	86.3	56.2	10701.0
	32.2	76.6	75.8	8859.2	88.6	87.7	9041.2	98.0	76.3	10975.3	63.8	62.9	9310.2	74.7	74.3	9760.2	88.3	72.0	11101.1

Notes:

1. All capacities are gross and have not considered indoor fan heat. To obtain net cooling capacity subtract indoor fan heat;

2. TC = Total Capacity (Unit: 1,000Btu/h); SC = Sensible Capacity (Unit: 1,000Btu/h).

KRFN260CFAN3

Cooling capacity: (Continued)

Gross Cooling Capacity																			
Ambient DB(°C)		48									51.7								
Indoor	WB(°C)	16.1			19.4			22.8			16.1			19.4			22.8		
CFM	DB(°C)	TC	SC	PI	TC	SC	PI	TC	SC	PI	TC	SC	PI	TC	SC	PI	TC	SC	PI
2,100	23.9	53.7	51.6	8637.4	65.6	36.7	8635.8	79.2	20.8	10369.3	49.3	47.4	9132.2	59.8	33.3	8986.5	72.7	19.1	11076.9
	26.7	55.1	53.1	8882.6	67.1	51.0	8906.0	81.1	34.8	10714.4	50.6	48.8	9402.4	61.3	46.5	9281.7	74.5	32.0	11477.0
	29.4	56.5	55.0	9227.7	68.7	64.3	9269.6	83.1	49.8	11290.0	51.9	50.5	9747.5	62.8	58.8	9688.7	76.3	45.7	12082.6
	32.2	58.0	57.3	9522.9	70.3	69.1	9613.0	85.1	65.1	11690.1	53.3	52.6	10042.7	64.4	63.3	10038.8	78.1	59.8	12482.7
2,830	23.9	55.6	49.6	8731.4	67.4	39.4	8724.8	74.4	21.4	10131.9	51.1	45.5	9221.2	61.4	35.7	9065.6	68.3	19.7	10859.4
	26.7	57.0	52.8	8976.5	69.6	54.7	8999.9	76.2	36.9	10472.2	52.4	48.5	9491.3	63.0	50.1	9365.7	70.0	33.9	11254.5
	29.4	58.5	56.2	9326.6	70.6	67.2	9363.6	78.1	52.1	11042.8	53.7	51.6	9836.5	64.5	61.4	9772.7	71.7	47.9	11855.2
	32.2	60.0	57.8	9621.8	72.2	71.0	9707.0	80.0	66.8	11438.0	55.1	53.1	10131.7	66.1	65.0	10122.8	73.4	61.4	12250.4
3,800	23.9	58.2	55.7	8859.9	69.0	42.0	8803.9	81.3	22.1	10473.1	53.4	51.1	9334.9	62.9	38.1	9139.8	74.6	20.3	11170.8
	26.7	59.7	57.6	9110.0	70.6	59.1	9079.0	83.3	38.9	10823.2	54.8	52.9	9610.0	64.5	53.9	9439.9	76.4	35.7	11570.9
	29.4	61.2	59.6	9460.1	72.2	70.5	9440.9	85.3	55.2	11398.8	56.2	54.7	9960.1	66.1	64.9	9851.8	78.3	50.7	12181.5
	32.2	62.8	61.9	9760.2	73.9	73.5	9791.0	87.3	71.0	11798.9	57.7	56.9	10260.2	67.7	67.3	10201.9	80.1	65.2	12581.6

Notes:

1. All capacities are gross and have not considered indoor fan heat. To obtain net cooling capacity subtract indoor fan heat;

2. TC = Total Capacity (Unit: 1,000Btu/h); SC = Sensible Capacity (Unit: 1,000Btu/h).

KRFN300CFAN3

Cooling capacity:

Gross Cooling Capacity																			
Ambient DB(°C)		29.4									35								
Indoor	WB(°C)	16.1			19.4			22.8			16.1			19.4			22.8		
CFM	DB(°C)	TC	SC	PI	TC	SC	PI	TC	SC	PI	TC	SC	PI	TC	SC	PI	TC	SC	PI
2,450	23.9	89.1	77.0	8400.4	99.8	56.7	8825.0	103.6	34.9	9516.1	82.1	73.5	8742.2	95.7	54.7	8936.5	102.7	33.7	10074.2
	26.7	91.0	78.7	8547.1	102.0	73.0	9000.1	106.0	49.7	9716.2	84.0	75.2	8923.9	97.9	71.1	9100.9	104.9	50.2	10320.9
	29.4	93.1	80.5	8808.9	104.3	87.0	9247.5	108.3	62.4	10066.3	85.9	76.8	9185.6	100.1	87.3	9359.0	107.3	64.1	10631.9
	32.2	95.2	82.3	9105.6	106.6	101	9597.6	110.6	76.0	10463.0	87.8	78.6	9479.0	102.3	100	9672.0	109.7	78.1	11035.4
3,500	23.9	91.5	82.5	8498.3	100.8	58.8	8865.5	104.0	35.4	9529.6	84.8	79.0	8846.8	99.0	57.7	9064.7	102.9	34.5	10084.3
	26.7	93.6	84.4	8648.4	103.0	74.9	9040.6	106.3	50.5	9729.7	86.7	80.8	9028.5	102.0	75.4	9189.0	105.2	51.3	10331.0
	29.4	95.7	86.3	8910.1	105.3	90.9	9288.0	108.6	63.8	10079.8	88.7	82.7	9293.6	104.3	91.9	9527.7	107.5	66.5	10642.0
	32.2	97.8	88.2	9210.2	107.6	104	9638.1	111.0	77.2	10479.9	90.6	84.6	9590.3	105.8	101	9810.4	109.9	81.6	11045.5
4,200	23.9	93.9	87.6	8589.4	101.7	60.9	8902.6	104.2	36.0	9539.7	87.3	84.3	8948.0	100.1	60.3	9108.6	103.5	34.7	10107.9
	26.7	95.9	89.6	8739.5	104.0	77.5	9077.7	106.6	55.9	9739.8	89.3	86.2	9133.1	103.8	79.6	9333.7	105.9	52.0	10358.0
	29.4	98.1	91.6	9004.6	106.3	94.1	9328.5	108.9	64.8	10089.9	91.3	88.2	9398.2	104.5	97.3	9534.5	108.2	67.7	10669.0
	32.2	100.2	93.6	9304.7	108.6	106	9678.6	111.3	78.6	10490.0	93.4	90.2	9698.3	107.7	104	9884.6	110.5	84.0	11069.1

Notes:

1. All capacities are gross and have not considered indoor fan heat. To obtain net cooling capacity subtract indoor fan heat;

2. TC = Total Capacity (Unit: 1,000Btu/h); SC = Sensible Capacity (Unit: 1,000Btu/h).

KRFN300CFAN3

Cooling capacity: (Continued)

Gross Cooling Capacity																			
Ambient DB(°C)		40.6									46.1								
Indoor	WB(°C)	16.1			19.4			22.8			16.1			19.4			22.8		
CFM	DB(°C)	TC	SC	PI	TC	SC	PI	TC	SC	PI	TC	SC	PI	TC	SC	PI	TC	SC	PI
2,450	23.9	75.0	69.9	9079.1	88.5	51.9	9313.0	100.1	32.0	10688.9	62.9	61.4	9412.1	75.7	43.3	9883.7	91.1	25.1	10864.4
	26.7	76.7	71.6	9310.8	90.5	68.2	9559.8	102.4	48.3	10969.0	64.4	63.0	9658.8	77.5	60.3	10155.5	93.2	41.5	11164.5
	29.4	78.5	73.2	9498.2	92.6	85.0	9750.5	104.6	63.6	11376.7	66.1	64.5	9885.5	79.4	76.6	10342.9	95.4	57.8	11572.1
	32.2	80.3	74.9	9795.0	94.7	93.4	10097.3	106.9	78.6	11776.8	67.7	66.2	10182.2	81.3	78.4	10689.6	97.6	73.8	11972.2
3,500	23.9	77.8	75.6	9190.4	90.8	55.1	9400.8	100.8	32.7	10715.9	65.4	62.8	9509.9	77.4	46.6	9947.8	91.8	25.7	10894.7
	26.7	79.6	77.3	9425.5	92.8	73.0	9650.9	103.0	50.3	10996.0	67.0	64.3	9760.0	80.7	64.6	10280.3	94.0	43.9	11194.8
	29.4	81.5	79.1	9616.3	94.9	91.7	9841.6	105.3	67.3	11403.7	68.6	66.0	9986.7	81.2	79.4	10410.3	96.2	61.4	11605.9
	32.2	83.3	80.9	9913.0	97.0	95.4	10188.4	107.6	83.2	11803.8	70.4	67.6	10286.8	83.1	81.3	10757.1	98.5	78.4	12006.0
4,200	23.9	79.5	74.1	9257.9	92.2	57.6	9458.1	101.3	33.2	10736.2	68.0	66.2	9614.5	79.4	49.6	10028.8	92.4	26.4	10918.3
	26.7	81.4	75.8	9493.0	94.3	78.4	9708.2	103.6	52.0	11016.3	69.7	67.9	9864.6	81.3	69.7	10303.9	94.6	46.3	11218.4
	29.4	83.2	77.5	9683.8	96.4	93.2	9899.0	105.9	68.7	11427.3	71.4	69.5	10094.7	83.3	81.1	10494.7	96.8	64.4	11629.5
	32.2	85.1	79.2	9983.9	98.5	95.1	10249.1	108.2	85.8	11827.4	73.1	71.2	10394.8	85.3	83.9	10844.8	99.1	82.9	12029.6

Notes:

1. All capacities are gross and have not considered indoor fan heat. To obtain net cooling capacity subtract indoor fan heat;

2. TC = Total Capacity (Unit: 1,000Btu/h); SC = Sensible Capacity (Unit: 1,000Btu/h).

KRFN300CFAN3

Cooling capacity: (Continued)

Gross Cooling Capacity																			
Ambient DB(°C)		48									51.7								
Indoor	WB(°C)	16.1			19.4			22.8			16.1			19.4			22.8		
CFM	DB(°C)	TC	SC	PI	TC	SC	PI	TC	SC	PI	TC	SC	PI	TC	SC	PI	TC	SC	PI
2,450	23.9	60.8	59.3	9742.1	75.5	43.1	9903.4	89.0	23.0	11425.7	56.2	54.8	10237.3	67.8	38.4	10208.0	81.8	21.8	12043.8
	26.7	62.3	60.9	9988.8	77.3	60.1	10175.1	91.1	39.4	11775.8	57.6	56.2	10505.7	69.5	53.8	10497.9	83.7	36.7	12440.5
	29.4	64.0	62.4	10335.5	79.2	76.4	11043.7	93.3	55.7	12183.5	59.0	57.7	10835.5	71.2	68.6	11422.4	85.7	51.5	12883.2
	32.2	65.6	64.1	10632.2	81.1	78.2	11389.6	95.5	71.7	12583.6	60.6	59.1	11152.5	72.9	70.4	11769.1	87.8	66.1	13286.6
3,500	23.9	63.3	60.7	9839.9	77.2	46.4	9967.5	89.7	23.6	11456.1	58.4	56.1	10325.0	69.3	41.4	10265.3	82.5	22.3	12070.8
	26.7	64.9	62.2	10090.0	80.5	64.4	10300.0	91.9	41.8	11806.2	59.9	57.5	10596.8	72.9	57.7	10632.9	84.5	39.0	12470.9
	29.4	66.5	63.9	10436.7	81.0	79.2	11111.2	94.1	59.3	12217.2	61.4	59.0	10930.0	73.3	71.1	11503.4	86.5	54.8	12913.5
	32.2	68.3	65.5	10736.8	82.9	81.1	11457.1	96.4	76.3	12617.3	63.0	60.5	11247.0	74.6	72.9	11833.2	88.5	70.3	13317.0
4,200	23.9	65.9	64.1	9944.5	79.2	49.4	10048.5	90.3	24.3	11479.7	60.8	59.2	10419.5	71.2	44.1	10339.5	83.0	22.9	12091.0
	26.7	67.6	65.8	10194.6	81.1	69.5	10323.6	92.5	44.2	11829.8	62.4	60.7	10694.6	73.1	62.3	10639.6	85.0	41.0	12491.1
	29.4	69.3	67.4	10544.7	83.1	80.8	11194.7	94.7	62.3	12240.8	64.4	62.2	11044.7	74.7	72.7	11560.7	87.1	57.6	12937.2
	32.2	71.0	69.1	10844.8	85.1	83.7	11544.8	97.0	80.8	12640.9	65.5	63.8	11344.8	76.5	75.3	11910.8	89.1	74.4	13337.3

Notes:

1. All capacities are gross and have not considered indoor fan heat. To obtain net cooling capacity subtract indoor fan heat;

2. TC = Total Capacity (Unit: 1,000Btu/h); SC = Sensible Capacity (Unit: 1,000Btu/h).

KRFN350CFAN3

Cooling capacity:

Gross Cooling Capacity																			
Ambient DB(°C)		29.4									35								
Indoor	WB(°C)	16.1			19.4			22.8			16.1			19.4			22.8		
CFM	DB(°C)	TC	SC	PI	TC	SC	PI	TC	SC	PI	TC	SC	PI	TC	SC	PI	TC	SC	PI
3,300	23.9	106.6	92.5	9374.6	119.1	68.9	10455.4	123.6	43.4	10837.3	98.5	88.4	8753.4	114.4	66.5	10317.4	122.5	42.0	10828.7
	26.7	109.0	94.6	9686.2	121.8	87.9	10790.6	126.4	60.8	11187.5	100.8	90.5	9073.6	117.0	85.7	10471.4	125.2	61.3	11178.9
	29.4	111.4	96.7	10043.3	124.4	104	11165.0	129.1	75.6	11570.6	103.0	92.4	9499.7	119.5	105	10923.4	127.9	77.5	11648.2
	32.2	113.7	98.7	10557.7	127.0	121	11698.0	131.7	91.3	12111.9	105.1	94.4	10014.1	122.0	119	11534.1	130.6	93.8	12198.2
4,100	23.9	109.6	95.5	9633.5	122.1	71.9	10714.3	126.6	46.4	11096.2	101.5	91.4	9012.2	117.4	69.5	10576.2	125.5	45.0	11087.6
	26.7	112.0	97.6	9945.0	124.8	90.9	11049.5	129.4	63.8	11446.4	103.8	93.5	9332.4	120.0	88.7	10710.2	128.2	64.3	11437.8
	29.4	114.4	99.7	10302.2	127.4	107	11423.9	132.1	78.6	11829.4	106.0	95.4	9758.6	122.5	108	11182.3	130.9	80.5	11907.1
	32.2	116.7	102	10816.6	130.0	124	11956.9	134.7	94.3	12370.8	108.1	97.4	10273.0	125.0	122	11792.9	133.6	96.8	12457.1
4,600	23.9	112.5	102	9883.7	123.3	74.3	10817.8	127.0	47.0	11130.7	104.6	97.9	9279.7	121.2	73.0	10904.1	125.8	45.9	11113.4
	26.7	115.0	104	10203.9	126.0	93.2	11153.0	129.8	64.7	11480.9	106.9	100	9599.9	125.9	93.7	11239.3	128.5	65.6	11463.6
	29.4	117.4	106	10561.0	128.6	112	11527.4	132.5	80.2	11863.9	109.2	102	10034.7	127.5	113	11613.7	131.2	83.3	11933.0
	32.2	119.8	109	11084.0	131.2	128	12060.4	135.2	95.7	12413.9	111.4	104	10557.7	129.1	123	12146.7	133.9	101	12483.0

Notes:

1. All capacities are gross and have not considered indoor fan heat. To obtain net cooling capacity subtract indoor fan heat;

2. TC = Total Capacity (Unit: 1,000Btu/h); SC = Sensible Capacity (Unit: 1,000Btu/h).

KRFN350CFAN3

Cooling capacity: (Continued)

Gross Cooling Capacity																			
Ambient DB(°C)		40.6									46.1								
Indoor	WB(°C)	16.1			19.4			22.8			16.1			19.4			22.8		
CFM	DB(°C)	TC	SC	PI	TC	SC	PI	TC	SC	PI	TC	SC	PI	TC	SC	PI	TC	SC	PI
3,300	23.9	90.2	84.3	10064.9	106.0	63.3	11439.1	119.5	40.0	12606.2	80.0	78.3	10694.2	95.0	57.2	12146.0	112.9	35.9	13554.7
	26.7	92.3	86.3	10376.5	108.4	82.3	11765.6	122.2	59.1	12956.4	81.9	80.2	11005.7	97.2	77.1	12325.9	115.5	55.2	13904.9
	29.4	94.3	88.2	10716.4	110.8	102	12140.0	124.8	77.0	13348.0	83.8	82.0	11500.9	99.4	96.1	12847.0	118.0	74.1	14451.9
	32.2	96.3	90.0	11239.4	113.1	112	12673.0	127.4	94.3	13898.0	85.6	83.8	12015.3	101.5	98.1	13380.0	120.5	92.7	15001.9
4,100	23.9	93.2	87.3	10323.7	109.0	66.3	11697.9	122.5	43.0	12865.0	83.0	81.3	10953.0	98.0	60.2	12404.8	115.9	38.9	13813.5
	26.7	95.3	89.3	10635.3	111.4	85.3	12024.5	125.2	62.1	13215.2	84.9	83.2	11264.6	100.2	80.1	12584.7	118.5	58.2	14163.7
	29.4	97.3	91.2	10975.2	113.8	105	12398.9	127.8	80.0	13606.9	86.8	85.0	11759.8	102.4	99.1	13105.8	121.0	77.1	14710.7
	32.2	99.3	93.0	11498.2	116.1	115	12931.9	130.4	97.3	14156.9	88.6	86.8	12274.2	104.5	101	13638.8	123.5	95.7	15260.7
4,600	23.9	96.5	93.9	10608.5	111.6	70.0	11922.3	123.3	43.9	12934.0	85.9	82.9	11203.2	99.9	64.0	12568.8	116.8	39.6	13891.2
	26.7	98.7	96.0	10928.7	114.1	91.0	12257.5	126.0	64.5	13284.2	87.9	84.8	11523.4	103.9	85.1	12904.0	119.4	61.0	14241.4
	29.4	100.8	98.0	11277.2	116.5	113	12631.9	128.6	84.3	13675.9	89.8	86.7	12018.6	104.4	102.3	13278.4	122.0	81.3	14797.0
	32.2	102.8	100	11800.2	118.8	117	13164.9	131.2	103	14225.9	91.7	88.5	12541.6	106.5	104	13811.4	124.5	101	15347.0

Notes:

1. All capacities are gross and have not considered indoor fan heat. To obtain net cooling capacity subtract indoor fan heat;

2. TC = Total Capacity (Unit: 1,000Btu/h); SC = Sensible Capacity (Unit: 1,000Btu/h).

KRFN350CFAN3

Cooling capacity: (Continued)

Gross Cooling Capacity																			
Ambient DB(°C)		48									51.7								
Indoor	WB(°C)	16.1			19.4			22.8			16.1			19.4			22.8		
CFM	DB(°C)	TC	SC	PI	TC	SC	PI	TC	SC	PI	TC	SC	PI	TC	SC	PI	TC	SC	PI
3,300	23.9	77.8	76.1	10815.0	93.2	55.4	12301.3	110.7	33.7	13675.5	72.2	70.6	11720.9	85.8	51.4	13095.1	102.1	32.1	14322.6
	26.7	79.7	78.0	11126.5	95.4	75.3	12481.2	113.3	53.0	14025.7	73.9	72.3	12032.5	87.8	69.5	13231.9	104.4	49.6	14664.2
	29.4	81.6	79.8	11622.5	97.6	94.3	13003.1	115.8	71.9	14573.4	75.6	74.0	12519.1	89.8	86.8	13744.3	106.7	66.8	15202.5
	32.2	83.4	81.6	12136.9	99.7	96.3	13535.3	118.3	90.5	15123.4	77.3	75.6	13042.1	91.7	88.7	14320.5	109.0	83.7	15752.5
4,100	23.9	80.8	79.1	11073.8	96.2	58.4	12560.2	113.7	36.7	13934.3	75.2	73.6	11979.8	88.8	54.4	13354.0	105.1	35.1	14581.5
	26.7	82.7	81.0	11385.4	98.4	78.3	12705.0	116.3	56.0	14284.5	76.9	75.3	12291.4	90.8	72.5	13490.7	107.4	52.6	14923.0
	29.4	84.6	82.8	11881.4	100.6	97.3	13261.9	118.8	74.9	14832.3	78.6	77.0	12778.0	92.8	89.8	14003.2	109.7	69.8	15461.4
	32.2	86.4	84.6	12395.7	102.7	99.3	13794.1	121.3	93.5	15382.3	80.3	78.6	13301.0	94.7	91.7	14579.3	112.0	86.7	16011.4
4,600	23.9	83.7	80.7	11324.0	98.1	62.2	12724.1	114.6	37.4	14012.0	77.8	75.1	12204.1	90.5	57.9	13500.7	105.9	35.7	14650.5
	26.7	85.7	82.6	11644.2	102.1	83.3	13059.3	117.2	58.8	14362.2	76.8	84.8	12524.3	94.8	77.1	13835.9	108.3	55.2	15000.7
	29.4	87.6	84.5	12140.2	102.6	97.7	13433.7	119.8	79.1	14918.6	78.5	86.7	13019.5	95.2	92.7	14210.3	110.6	73.6	15539.1
	32.2	89.5	86.3	12663.2	104.7	103	13966.7	122.3	98.9	15468.6	80.2	88.5	13542.5	96.6	94.6	14743.3	112.9	91.6	16089.1

Notes:

1. All capacities are gross and have not considered indoor fan heat. To obtain net cooling capacity subtract indoor fan heat;

2. TC = Total Capacity (Unit: 1,000Btu/h); SC = Sensible Capacity (Unit: 1,000Btu/h).

KRFN440CFAN3

Cooling capacity:

Gross Cooling Capacity																			
Ambient DB(°C)		29.4									35								
Indoor	WB(°C)	16.1			19.4			22.8			16.1			19.4			22.8		
CFM	DB(°C)	TC	SC	PI	TC	SC	PI	TC	SC	PI	TC	SC	PI	TC	SC	PI	TC	SC	PI
3,500	23.9	130.8	114	10392.2	145.8	85.5	11818.4	151.2	54.9	12325.4	121.1	109	10483.5	140.1	82.7	12499.8	149.9	53.3	13222.4
	26.7	133.4	116	10700.9	148.8	108	12153.4	154.3	75.6	12675.4	123.6	111	10792.2	143.0	106	12630.5	152.9	76.2	13561.0
	29.4	136.3	119	11151.5	151.9	128	12626.7	157.5	93.3	13160.1	126.2	114	11435.7	146.0	128	13308.1	156.1	95.6	14261.3
	32.2	139.0	121	11663.2	155.0	148	13159.7	160.6	112	13698.7	128.7	116	11936.0	149.0	146	13716.3	159.3	115	14822.7
5,500	23.9	134.3	122	10721.3	147.2	88.4	11954.6	151.7	55.7	12370.8	124.8	117	10835.3	144.7	86.9	12931.0	150.2	54.3	13256.4
	26.7	137.0	124	11041.3	150.2	111	12289.6	154.8	76.7	12720.8	127.3	119	11144.0	150.0	111	13300.0	153.2	77.7	13595.1
	29.4	139.9	127	11492.0	153.3	133	12762.9	158.0	95.2	13205.5	130.0	122	11798.9	152.0	135	13875.5	156.4	99.0	14295.4
	32.2	142.8	129	12015.0	156.4	152	13295.9	161.2	114	13755.5	132.7	124	12310.5	153.9	147	14181.5	159.7	120	14856.7
6,400	23.9	137.5	129	11027.7	148.5	91.3	12079.4	152.0	56.5	12404.8	128.4	124	11175.7	146.3	90.6	13078.5	151.1	54.7	13335.8
	26.7	140.3	131	11347.7	151.5	115	12414.4	155.1	84.2	12754.8	131.0	127	11495.7	151.3	117	13413.5	154.2	78.8	13685.8
	29.4	143.2	134	11809.7	154.8	138	12899.1	158.4	96.7	13239.5	133.8	129	12150.6	152.2	142	13898.2	157.4	101	14386.1
	32.2	146.1	137	12332.7	157.9	154	13432.1	161.6	116	13789.5	136.5	132	12673.6	156.6	152	14431.2	160.5	123	14936.1

Notes:

1. All capacities are gross and have not considered indoor fan heat. To obtain net cooling capacity subtract indoor fan heat;

2. TC = Total Capacity (Unit: 1,000Btu/h); SC = Sensible Capacity (Unit: 1,000Btu/h).

KRFN440CFAN3

Cooling capacity: (Continued)

Gross Cooling Capacity																			
Ambient DB(°C)		40.6									46.1								
Indoor	WB(°C)	16.1			19.4			22.8			16.1			19.4			22.8		
CFM	DB(°C)	TC	SC	PI	TC	SC	PI	TC	SC	PI	TC	SC	PI	TC	SC	PI	TC	SC	PI
3,500	23.9	111.1	104	12036.3	130.1	78.8	13848.3	146.3	50.9	15387.9	100.6	98.5	13610.7	118.6	73.2	15331.9	140.0	47.6	17382.1
	26.7	113.4	106	12344.9	132.7	101	14171.9	149.3	73.5	15737.9	102.6	101	13919.3	121.0	96.8	15655.5	142.9	70.6	17732.1
	29.4	115.8	108	12784.2	135.6	125	14656.6	152.4	95.0	16245.3	104.9	103	14358.6	123.6	120	16128.9	145.9	93.2	18239.5
	32.2	118.2	111	13295.9	138.3	137	15178.2	155.5	116	16795.3	107.0	105	14870.3	126.1	122	16650.5	148.9	116	18789.5
5,500	23.9	115.1	112	12410.7	133.2	83.3	14143.3	147.2	51.9	15478.7	104.0	100	13939.7	120.8	77.8	15547.5	141.1	48.5	17484.3
	26.7	117.5	114	12730.7	135.9	108	14478.3	150.2	76.4	15828.7	106.2	103	14259.7	125.4	103	16075.4	144.0	73.9	17834.3
	29.4	120.0	117	13181.4	138.8	134	14963.0	153.3	100	16336.1	108.5	105	14699.0	126.0	124	16335.8	147.1	98.3	18353.0
	32.2	122.4	119	13693.0	141.6	139	15484.6	156.4	122	16886.1	110.7	107	15222.0	128.5	126	16877.5	150.1	122	18903.0
6,400	23.9	117.5	110	12637.7	135.2	86.7	14336.2	147.9	52.5	15546.8	107.8	105	14291.5	123.7	82.0	15819.8	142.0	49.4	17563.7
	26.7	119.9	112	12957.7	138.0	116	14671.2	150.9	78.7	15896.8	109.9	107	14611.5	126.2	110	16154.8	144.8	77.2	17913.7
	29.4	122.4	114	13408.3	140.9	136	15155.9	154.2	102	16415.5	112.3	110	15062.2	129.0	126	16639.5	147.9	103	18432.4
	32.2	124.9	117	13931.3	143.7	139	15688.9	157.3	126	16965.5	114.6	112	15585.2	131.6	130	17172.5	150.9	128	18982.4

Notes:

1. All capacities are gross and have not considered indoor fan heat. To obtain net cooling capacity subtract indoor fan heat;

2. TC = Total Capacity (Unit: 1,000Btu/h); SC = Sensible Capacity (Unit: 1,000Btu/h).

KRFN440CFAN3

Cooling capacity: (Continued)

Gross Cooling Capacity																			
Ambient DB(°C)		48									51.7								
Indoor	WB(°C)	16.1			19.4			22.8			16.1			19.4			22.8		
CFM	DB(°C)	TC	SC	PI	TC	SC	PI	TC	SC	PI	TC	SC	PI	TC	SC	PI	TC	SC	PI
3,500	23.9	97.1	95.0	13671.4	117.7	72.3	15356.4	136.5	44.1	17160.9	91.2	89.3	14915.6	107.5	66.2	16489.3	127.1	43.1	18335.4
	26.7	99.1	97.1	13980.0	120.1	95.9	15680.1	139.4	67.1	17510.9	93.0	91.1	15213.0	109.7	87.7	16790.3	129.6	63.8	18674.0
	29.4	101.4	99.2	14457.3	122.7	119	16191.4	142.4	89.7	18056.3	95.0	93.1	15710.8	112.1	109	17322.1	132.3	84.5	19239.9
	32.2	103.5	101	14969.0	125.2	121	16710.9	145.4	112	18606.3	97.1	95.0	16290.5	114.3	111	17843.8	135.1	105	19801.3
5,500	23.9	100.5	96.9	14000.5	119.9	76.9	15572.1	137.6	45.0	17263.0	94.3	91.1	15210.7	109.6	70.4	16682.2	128.0	43.8	18426.1
	26.7	102.7	99.0	14320.5	124.4	102	16100.0	140.5	70.4	17613.0	96.2	92.9	15519.3	114.5	93.2	17244.2	130.7	67.0	18776.1
	29.4	105.0	101	14797.8	125.1	123	16418.4	143.6	94.8	18169.7	98.4	94.9	16028.5	114.9	112	17594.5	133.4	89.0	19342.0
	32.2	107.2	103	15320.8	127.6	125	16937.9	146.6	119	18719.7	100.4	96.9	16608.2	116.6	114	18059.4	136.2	111	19903.4
6,400	23.9	104.3	102	14352.2	122.8	81.1	15844.4	138.5	45.9	17342.4	97.7	95.4	15528.4	112.2	74.3	16931.9	128.8	44.6	18494.2
	26.7	106.4	104	14672.2	125.3	109	16179.4	141.3	73.7	17692.4	99.7	97.3	15848.4	114.7	99.6	17266.9	131.4	69.8	18844.2
	29.4	108.8	106	15160.9	128.1	121	16699.9	144.4	99.1	18249.2	102.5	99.5	16414.3	117.0	114	17787.4	134.3	93.0	19421.5
	32.2	111.1	108	15683.9	130.7	129	17232.9	147.4	125	18799.2	103.9	102	16937.3	119.4	118	18320.4	136.9	116	19971.5

Notes:

1. All capacities are gross and have not considered indoor fan heat. To obtain net cooling capacity subtract indoor fan heat;

2. TC = Total Capacity (Unit: 1,000Btu/h); SC = Sensible Capacity (Unit: 1,000Btu/h).

KRFN530CFAN3

Cooling capacity:

Gross Cooling Capacity																			
Ambient DB(°C)		29.4									35								
Indoor	WB(°C)	16.1			19.4			22.8			16.1			19.4			22.8		
CFM	DB(°C)	TC	SC	PI	TC	SC	PI	TC	SC	PI	TC	SC	PI	TC	SC	PI	TC	SC	PI
5,500	23.9	163.5	131	15041.6	183.2	105	15388.1	193.5	72.1	15888.1	153.3	125	15898.0	171.6	99.8	16270.9	188.7	68.9	16770.9
	26.7	165.6	156	15321.7	185.5	128	15668.2	197.3	96.8	16168.2	157.1	150	16148.1	174.2	123	16551.0	191.1	93.1	17051.0
	29.4	173.0	166	16002.1	187.7	150	16298.6	199.9	117	16798.6	164.6	160	16678.5	176.7	146	16843.8	193.6	115	17343.8
	32.2	182.9	176	16225.2	190.4	173	16521.7	202.4	137	17021.7	175.6	170	17201.6	180.4	169	17366.9	196.3	135	17866.9
7,000	23.9	167.9	139	15191.6	188.6	109	15538.1	195.7	73.5	16038.1	155.2	133	16048.0	178.9	104	16420.9	190.1	70.4	16920.9
	26.7	171.6	166	15471.7	190.0	133	15818.2	198.5	99.0	16318.2	162.0	157	16298.1	180.0	129	16701.0	192.2	96.3	17201.0
	29.4	179.1	174	16152.1	191.2	157	16448.6	202.3	120	16948.6	171.8	167	16828.5	182.8	154	16993.8	195.3	118	17493.8
	32.2	188.9	183	16375.2	192.6	180	16671.7	204.7	139	17171.7	181.6	176	17351.6	184.1	179	17516.9	198.7	140	18016.9
7,800	23.9	169.8	146	15491.6	190.9	111	15838.1	198.2	74.8	16338.1	160.7	140	16348.0	185.0	128	16720.9	191.8	71.7	17220.9
	26.7	174.2	167	15771.7	192.5	166	16118.2	201.0	99.9	16618.2	164.5	160	16598.1	187.3	164	17001.0	194.3	97.9	17501.0
	29.4	185.2	178	16452.1	193.7	172	16748.6	203.4	122	17248.6	176.7	171	17128.5	187.8	171	17293.8	196.9	121	17793.8
	32.2	193.8	186	16675.2	195.3	188	16971.7	206.0	144	17471.7	186.5	181	17651.6	188.9	187	17816.9	198.2	144	18316.9

Notes:

1. All capacities are gross and have not considered indoor fan heat. To obtain net cooling capacity subtract indoor fan heat;

2. TC = Total Capacity (Unit: 1,000Btu/h); SC = Sensible Capacity (Unit: 1,000Btu/h).

KRFN530CFAN3

Cooling capacity: (Continued)

Gross Cooling Capacity																			
Ambient DB(°C)		40.6									46.1								
Indoor	WB(°C)	16.1			19.4			22.8			16.1			19.4			22.8		
CFM	DB(°C)	TC	SC	PI	TC	SC	PI	TC	SC	PI	TC	SC	PI	TC	SC	PI	TC	SC	PI
5,500	23.9	142.6	120	16610.8	163.5	94.5	17014.1	185.6	65.5	17514.1	117.6	102	17211.6	141.0	85.6	18401.2	160.6	49.3	18901.2
	26.7	146.4	141	16840.9	166.1	118	17144.2	187.0	89.2	17644.2	122.6	119	17696.7	143.5	101	18531.3	163.2	72.9	19031.3
	29.4	153.9	148	17071.3	169.8	141	17637.0	188.3	112	18137.0	135.0	131	18182.1	144.8	124	19224.1	165.8	96.3	19724.1
	32.2	166.3	160	17794.4	171.2	166	18360.1	189.6	133	18860.1	147.4	143	19160.2	148.4	147	19974.2	167.1	119	20474.2
7,000	23.9	147.5	128	16760.8	164.7	109	17164.1	188.1	66.9	17664.1	121.3	109	17361.6	142.2	90.5	18551.2	165.6	50.7	19051.2
	26.7	151.3	145	16990.9	168.5	124	17294.2	189.4	92.3	17794.2	128.8	123	17846.7	146.0	107	18681.3	168.1	77.1	19181.3
	29.4	163.7	157	17221.3	173.5	150	17787.0	190.8	116	18287.0	141.2	135	18332.1	148.5	133	19374.1	169.4	101	19874.1
	32.2	171.2	164	17944.4	176.1	171	18510.1	193.3	139	19010.1	153.6	147	19310.2	151.1	151	20124.2	170.8	124	20624.2
7,800	23.9	150.0	135	17060.8	173.3	103	17464.1	190.6	68.2	17964.1	125.0	115	17661.6	150.8	104	18851.2	169.2	53.6	19351.2
	26.7	156.2	152	17290.9	175.9	130	17594.2	191.9	95.3	18094.2	127.7	124	18146.7	153.4	121	18981.3	170.6	79.6	19481.3
	29.4	169.8	165	17521.3	178.5	157	18087.0	193.2	119	18587.0	138.3	134	18632.1	157.1	147	19674.1	171.9	106	20174.1
	32.2	178.8	173	18244.4	181.0	176	18810.1	194.5	143	19310.1	159.7	155	19610.2	161.5	165	20424.2	173.2	131	20924.2

Notes:

1. All capacities are gross and have not considered indoor fan heat. To obtain net cooling capacity subtract indoor fan heat;

2. TC = Total Capacity (Unit: 1,000Btu/h); SC = Sensible Capacity (Unit: 1,000Btu/h).

KRFN530CFAN3

Cooling capacity: (Continued)

Gross Cooling Capacity																			
Ambient DB(°C)		48									51.7								
Indoor	WB(°C)	16.1			19.4			22.8			16.1			19.4			22.8		
CFM	DB(°C)	TC	SC	PI	TC	SC	PI	TC	SC	PI	TC	SC	PI	TC	SC	PI	TC	SC	PI
5,500	23.9	114.6	98.7	17039.4	140.5	85.1	18421.9	157.6	46.3	18921.9	112.6	97.3	16867.3	135.0	81.8	18766.8	154.0	46.9	19266.8
	26.7	119.6	116	17779.5	142.9	100	18552.0	160.2	69.9	19052.0	117.4	114	17862.4	137.5	96.3	18896.9	156.4	69.6	19396.9
	29.4	132.0	128	18520.0	144.1	123	19419.8	162.8	93.3	19919.8	129.3	125	18857.8	138.8	119	19864.4	158.9	92.1	20364.4
	32.2	144.4	140	19753.1	147.6	147	20199.9	164.1	116	20699.9	139.6	135	20345.9	141.3	141	20664.5	160.2	114	21164.5
7,000	23.9	118.3	106	17189.4	141.7	90.0	18571.9	162.6	47.7	19071.9	116.1	104	17017.3	136.2	86.5	18916.8	158.7	48.2	19416.8
	26.7	125.8	120	17929.5	145.4	107	18702.0	165.1	74.1	19202.0	123.3	119	18012.4	139.9	103	19046.9	161.2	73.6	19546.9
	29.4	138.2	132	18670.0	147.8	132	19569.8	166.4	97.6	20069.8	135.2	131	19007.8	142.3	127	20014.4	162.4	96.2	20514.4
	32.2	150.6	144	19903.1	150.3	150	20349.9	167.8	121	20849.9	147.2	142	20495.9	144.8	140	20814.5	163.7	119	21314.5
7,800	23.9	122.0	112	17489.4	150.3	103	18871.9	166.2	50.6	19371.9	119.7	110	17317.3	144.5	91.3	19216.8	162.2	51.1	19716.8
	26.7	124.7	121	18229.5	152.8	121	19002.0	167.6	76.6	19502.0	128.0	124	18312.4	147.0	108	19346.9	163.5	76.0	19846.9
	29.4	135.3	131	18970.0	156.4	142	19869.8	168.9	103	20369.8	141.2	137	19307.8	150.6	133	20314.4	164.8	101	20814.4
	32.2	156.7	152	20203.1	160.7	164	20649.9	170.2	128	21149.9	153.1	148	20795.9	154.6	150	21114.5	166.1	126	21614.5

Notes:

1. All capacities are gross and have not considered indoor fan heat. To obtain net cooling capacity subtract indoor fan heat;

2. TC = Total Capacity (Unit: 1,000Btu/h); SC = Sensible Capacity (Unit: 1,000Btu/h).

KRFN600CFAN3

Cooling capacity:

Gross Cooling Capacity																			
Ambient DB(°C)		29.4									35								
Indoor	WB(°C)	16.1			19.4			22.8			16.1			19.4			22.8		
CFM	DB(°C)	TC	SC	PI	TC	SC	PI	TC	SC	PI	TC	SC	PI	TC	SC	PI	TC	SC	PI
6,000	23.9	190.7	154	13977.6	213.3	123	16251.8	225.1	85.9	17368.9	179.0	147	15723.7	200.0	118	17997.9	219.6	82.2	19115.0
	26.7	193.1	182	14237.2	215.9	150	16511.4	229.4	114	17628.5	183.3	175	15983.3	202.9	144	18257.5	222.3	110	19374.6
	29.4	201.6	194	16404.4	218.4	175	18678.6	232.4	138	19545.7	191.9	186	17900.6	205.8	171	20174.7	225.2	135	21091.9
	32.2	212.8	104	16689.9	221.4	202	18964.0	235.2	160	19881.2	204.4	198	18236.0	209.9	197	20510.2	228.2	158	21477.3
7,600	23.9	195.8	160	14868.1	218.4	128	17142.3	230.2	91.0	18209.4	184.1	152	16564.2	205.1	123	18838.4	224.7	87.3	19905.5
	26.7	198.2	187	15130.7	221.0	155	17404.9	234.5	119	18472.0	188.4	180	16826.8	208.0	149	19101.0	227.4	115	20168.1
	29.4	206.7	199	16889.7	223.5	180	19163.9	237.5	143	20031.0	197.0	191	18385.9	210.9	176	20660.0	230.3	140	21577.1
	32.2	217.9	209	17175.2	226.5	207	19449.3	240.3	165	20316.5	209.5	203	18671.3	215.0	202	20945.5	233.3	163	21862.6
9,000	23.9	200.8	167	15868.6	224.6	134	18142.8	232.7	92.6	19159.9	186.3	160	17514.7	213.5	128	19788.9	226.3	89.0	20806.0
	26.7	205.1	198	16134.2	226.2	161	18408.4	235.9	122	19425.5	194.1	188	17780.3	218.0	160	20054.5	228.7	119	21071.6
	29.4	213.7	208	17415.5	227.5	189	19639.6	240.3	146	20606.8	205.3	199	18911.6	220.5	187	21135.8	232.2	144	22102.9
	32.2	224.8	218	17700.9	229.0	215	19925.1	242.9	167	20892.2	216.4	210	19197.1	221.6	215	21421.2	236.0	169	22388.4

Notes:

1. All capacities are gross and have not considered indoor fan heat. To obtain net cooling capacity subtract indoor fan heat;

2. TC = Total Capacity (Unit: 1,000Btu/h); SC = Sensible Capacity (Unit: 1,000Btu/h).

KRFN600CFAN3

Cooling capacity: (Continued)

Gross Cooling Capacity																			
Ambient DB(°C)		40.6									46.1								
Indoor	WB(°C)	16.1			19.4			22.8			16.1			19.4			22.8		
CFM	DB(°C)	TC	SC	PI	TC	SC	PI	TC	SC	PI	TC	SC	PI	TC	SC	PI	TC	SC	PI
6,000	23.9	166.7	140	17469.9	190.7	112	19744.0	216.0	78.3	22124.4	146.3	122	19500.2	173.2	110	21633.7	195.6	68.0	23888.2
	26.7	171.1	164	17729.5	193.7	139	20003.6	217.6	106	22384.0	152.0	147	19759.8	176.0	127	21893.3	198.6	95.1	24147.8
	29.4	179.7	173	19446.7	197.9	165	21670.9	219.1	131	23923.3	166.2	161	21299.1	177.5	154	23382.6	201.6	122	25587.1
	32.2	193.8	186	19832.2	199.4	193	22056.3	220.5	156	24358.8	180.4	175	21734.6	180.4	180	23818.1	202.9	148	26072.5
7,600	23.9	171.8	145	18260.4	195.8	117	20534.5	221.1	83.4	22864.9	151.4	133	20240.7	178.3	115	22374.2	200.7	73.1	24578.7
	26.7	176.2	169	18523.0	198.8	144	20797.1	222.7	111	23172.5	157.1	152	20503.3	181.1	132	22636.8	203.7	100	24841.3
	29.4	184.8	178	19932.0	203.0	170	22156.2	224.2	137	24408.6	171.3	166	21784.4	182.6	159	23867.9	206.7	127	26072.4
	32.2	198.9	191	20217.5	204.5	198	22441.6	225.6	161	24694.1	185.5	180	22069.8	185.5	186	24153.4	208.0	153	26357.8
9,000	23.9	177.4	155	19160.9	197.2	133	21435.0	224.0	85.0	23715.4	155.7	141	21091.2	179.5	120	23224.7	206.5	74.7	25379.2
	26.7	181.8	175	19426.5	201.5	151	21700.6	225.5	114	23891.0	164.3	158	21356.8	184.0	140	23490.3	209.3	105	25644.8
	29.4	196.0	188	20407.8	207.2	180	22631.9	227.1	141	24862.3	178.5	171	22188.1	186.8	169	24271.6	210.8	132	26526.1
	32.2	204.5	197	20693.2	210.1	204	22917.4	229.8	168	25147.8	192.6	185	22473.5	189.7	190	24557.1	212.3	159	26811.5

Notes:

1. All capacities are gross and have not considered indoor fan heat. To obtain net cooling capacity subtract indoor fan heat;

2. TC = Total Capacity (Unit: 1,000Btu/h); SC = Sensible Capacity (Unit: 1,000Btu/h).

KRFN600CFAN3

Cooling capacity: (Continued)

Gross Cooling Capacity																			
Ambient DB(°C)		48									51.7								
Indoor	WB(°C)	16.1			19.4			22.8			16.1			19.4			22.8		
CFM	DB(°C)	TC	SC	PI	TC	SC	PI	TC	SC	PI	TC	SC	PI	TC	SC	PI	TC	SC	PI
6,000	23.9	140.5	122	20152.1	170.1	107	21847.9	189.8	62.2	24415.4	140.6	123	21536.1	166.3	97.2	22193.9	188.1	65.3	24616.4
	26.7	146.2	142	20411.7	172.9	124	22107.5	192.8	89.3	24799.7	146.1	142	21920.3	169.1	122	22578.1	190.8	91.3	25000.6
	29.4	160.4	155	21851.0	174.4	150	23546.8	195.8	116	26139.0	159.7	155	23259.6	170.6	148	23967.4	193.7	117	26239.9
	32.2	174.6	169	22336.4	177.3	177	24032.3	197.1	142	26674.4	171.4	166	23795.1	173.4	173	24502.8	195.0	142	26775.4
7,600	23.9	145.6	127	20842.6	175.2	112	22538.4	194.9	67.3	25055.9	145.7	128	22176.6	171.4	102	22834.4	193.2	70.4	25256.9
	26.7	151.3	147	21105.2	178.0	129	22800.0	197.9	94.4	25443.2	151.2	147	22563.8	174.2	127	23221.6	195.9	96.4	25644.1
	29.4	165.5	161	22336.3	179.5	156	24032.1	200.9	121	26624.2	164.8	160	23744.9	175.7	153	24452.7	198.8	122	26725.2
	32.2	179.7	174	22621.7	182.4	182	24317.5	202.9	147	26909.7	176.5	171	24030.3	178.5	179	24738.1	200.1	147	27010.7
9,000	23.9	149.9	136	21643.1	176.5	117	23338.9	200.7	68.9	25806.4	149.7	136	22927.1	172.8	115	23584.9	198.6	71.8	26007.4
	26.7	158.5	152	21908.7	180.9	136	23604.5	203.5	99.2	26196.7	157.9	153	23317.3	177.0	134	23975.1	201.4	101	26397.6
	29.4	172.7	166	22740.0	183.7	167	24385.8	205.0	126	27078.0	171.6	167	24148.6	179.7	162	24756.4	202.8	127	27178.9
	32.2	186.8	179	23025.4	186.6	187	24671.2	206.5	153	27363.4	185.2	180	24434.0	182.5	177	25041.8	204.1	153	27464.4

Notes:

1. All capacities are gross and have not considered indoor fan heat. To obtain net cooling capacity subtract indoor fan heat;

2. TC = Total Capacity (Unit: 1,000Btu/h); SC = Sensible Capacity (Unit: 1,000Btu/h).

KRFN700CFAN3

Cooling capacity:

Gross Cooling Capacity																			
Ambient DB(°C)		29.4									35								
Indoor	WB(°C)	16.1			19.4			22.8			16.1			19.4			22.8		
CFM	DB(°C)	TC	SC	PI	TC	SC	PI	TC	SC	PI	TC	SC	PI	TC	SC	PI	TC	SC	PI
7,000	23.9	216.2	174	20278.5	242.2	138	21474.3	225.9	95.5	22772.2	202.7	166	20646.9	227.0	132	21842.7	249.5	91.3	23140.6
	26.7	218.8	206	20347.6	245.2	169	21613.6	260.8	128	22857.5	207.6	198	20786.3	230.2	163	22052.3	252.6	123	23296.1
	29.4	228.6	222	20902.9	247.9	198	21796.9	264.0	155	23029.6	217.4	211	21341.6	233.5	193	22235.5	255.7	152	23468.2
	32.2	241.4	234	20918.6	251.3	229	22002.3	267.3	180	23085.1	231.8	225	21357.3	238.2	224	22441.0	259.1	179	23523.8
8,800	23.9	222.1	183	20598.6	249.4	145	22043.4	258.8	97.3	22865.2	205.3	175	20957.4	236.5	138	22402.1	251.3	93.2	23223.9
	26.7	226.8	219	20638.7	251.2	175	22163.4	262.4	131	22940.7	214.1	206	21077.4	240.0	171	22602.0	254.1	127	23379.4
	29.4	236.5	229	20919.0	252.6	208	22235.5	267.3	158	23157.3	227.0	218	21357.7	241.4	203	22674.2	258.0	156	23596.0
	32.2	249.4	242	21006.7	254.3	238	22324.4	270.3	183	23212.8	239.8	230	21445.4	243.0	237	22763.1	262.4	185	23651.5
10,300	23.9	224.5	193	20425.4	252.5	147	22246.7	262.1	99.1	22788.8	212.5	185	21069.5	244.7	193	22890.8	253.6	95.0	23432.9
	26.7	230.2	223	20902.9	254.4	180	22518.7	265.6	132	23096.2	217.4	211	21341.6	246.5	231	22957.4	256.9	130	23534.9
	29.4	244.7	237	20992.0	255.9	214	22607.6	268.7	161	23198.2	233.5	226	21430.7	248.1	233	23046.2	260.1	160	23636.9
	32.2	255.9	248	21080.3	257.8	248	22679.8	272.0	190	23308.2	246.3	239	21519.0	249.4	246	23118.4	261.7	190	23746.9

Notes:

1. All capacities are gross and have not considered indoor fan heat. To obtain net cooling capacity subtract indoor fan heat;

2. TC = Total Capacity (Unit: 1,000Btu/h); SC = Sensible Capacity (Unit: 1,000Btu/h).

KRFN700CFAN3

Cooling capacity: (Continued)

Gross Cooling Capacity																			
Ambient DB(°C)		40.6									46.1								
Indoor	WB(°C)	16.1			19.4			22.8			16.1			19.4			22.8		
CFM	DB(°C)	TC	SC	PI	TC	SC	PI	TC	SC	PI	TC	SC	PI	TC	SC	PI	TC	SC	PI
7,000	23.9	188.6	158	22346.6	216.2	125	22790.6	245.5	86.7	24988.5	178.9	158	23928.7	192.7	120	24372.7	218.7	71.7	26993.8
	26.7	193.5	188	22486.0	219.5	156	23000.2	247.1	118	25144.0	185.4	180	24068.1	196.0	139	24582.3	222.0	103	27149.3
	29.4	203.2	197	23041.2	224.4	187	23183.4	248.7	148	25316.1	201.6	196	24623.4	197.6	170	24765.5	225.2	133	27321.4
	32.2	219.5	213	23057.0	226.0	219	23388.9	250.4	176	25371.6	217.9	212	24639.1	200.9	201	24971.0	226.9	164	27376.9
8,800	23.9	195.1	169	22657.1	217.9	144	23350.0	248.7	88.7	25071.8	183.7	167	24239.2	194.4	126	24932.1	225.2	73.5	27077.1
	26.7	200.0	194	22777.1	222.7	164	23549.9	250.4	122	25227.2	193.5	188	24359.2	199.2	148	25132.0	228.5	108	27232.6
	29.4	216.2	210	23057.4	229.2	198	23622.1	252.0	153	25443.8	209.7	204	24639.5	202.5	181	25204.2	230.1	139	27449.1
	32.2	226.0	219	23145.1	232.5	209	23710.9	255.2	184	25499.3	226.0	219	24727.2	205.7	206	25293.1	231.7	170	27504.6
10,300	23.9	198.4	179	22769.1	229.2	136	23838.6	252.0	90.3	25280.7	188.6	176	24351.3	205.7	150	25420.8	230.1	77.4	27286.0
	26.7	206.5	200	23041.2	232.5	172	23905.3	253.6	126	25382.7	200.0	194	24623.4	209.0	172	25487.4	231.7	112	27388.0
	29.4	224.4	218	23130.3	235.7	208	23994.1	255.2	157	25484.7	217.9	212	24712.5	213.9	207	26687.4	233.4	146	27490.0
	32.2	239.0	232	23218.6	239.0	239	24066.3	256.9	188	25594.7	234.1	227	24800.8	217.1	208	26759.6	235.0	180	27600.0

Notes:

1. All capacities are gross and have not considered indoor fan heat. To obtain net cooling capacity subtract indoor fan heat;

2. TC = Total Capacity (Unit: 1,000Btu/h); SC = Sensible Capacity (Unit: 1,000Btu/h).

KRFN700CFAN3

Cooling capacity: (Continued)

Gross Cooling Capacity																			
Ambient DB(°C)		48									51.7								
Indoor	WB(°C)	16.1			19.4			22.8			16.1			19.4			22.8		
CFM	DB(°C)	TC	SC	PI	TC	SC	PI	TC	SC	PI	TC	SC	PI	TC	SC	PI	TC	SC	PI
7,000	23.9	175.3	154	24299.7	191.8	119	24743.7	215.1	68.1	27360.2	152.1	132	24849.7	181.2	112	25293.7	205.8	67.0	27760.2
	26.7	181.8	176	24439.1	194.9	138	24953.3	218.4	99.1	27515.6	158.2	153	24989.1	184.3	131	25503.3	208.8	96.3	27915.6
	29.4	198.0	192	24994.4	196.3	169	25136.5	221.6	130	27687.8	173.6	168	25544.4	185.8	160	25686.5	211.9	125	28087.8
	32.2	214.3	208	25010.1	199.4	199	25342.0	223.3	160	27743.4	188.9	183	25560.1	199.9	179	25892.0	213.4	154	28143.3
8,800	23.9	180.1	164	24610.2	193.5	125	25303.1	221.6	69.9	27443.4	156.7	141	25160.2	182.8	118	25853.1	211.9	68.7	27843.4
	26.7	189.9	184	24730.2	198.0	147	25503.1	224.9	105	27598.9	165.9	161	25280.2	187.4	139	26053.0	215.0	102	27998.9
	29.4	206.1	200	25010.5	201.2	180	25575.2	226.5	136	27815.5	181.2	176	25560.5	190.4	171	26125.2	216.5	131	28215.5
	32.2	222.4	216	25098.2	204.2	204	25664.1	228.1	166	27871.0	196.6	190	25648.2	193.5	189	26214.1	218.0	160	28271.0
10,300	23.9	185.0	172	24722.3	204.8	149	25791.8	226.5	73.8	27652.4	161.3	149	25272.3	193.5	125	26341.8	216.5	72.4	28052.4
	26.7	196.4	191	24994.4	207.9	171	25858.4	228.1	108	27754.4	172.0	167	25544.4	196.6	146	26408.4	218.0	105	28154.4
	29.4	214.3	208	25083.5	212.6	195	27058.4	229.8	142	27856.4	188.9	183	25633.5	201.2	178	27608.4	219.6	137	28256.4
	32.2	230.5	224	25171.8	215.6	207	27130.6	231.4	176	27600.0	204.2	198	25721.8	204.2	200	27680.6	221.1	169	27600.0

Notes:

1. All capacities are gross and have not considered indoor fan heat. To obtain net cooling capacity subtract indoor fan heat;

2. TC = Total Capacity (Unit: 1,000Btu/h); SC = Sensible Capacity (Unit: 1,000Btu/h).

KRFN880CFAN3

Cooling capacity:

Gross Cooling Capacity																			
Ambient DB(°C)		29.4									35								
Indoor	WB(°C)	16.1			19.4			22.8			16.1			19.4			22.8		
CFM	DB(°C)	TC	SC	PI	TC	SC	PI	TC	SC	PI	TC	SC	PI	TC	SC	PI	TC	SC	PI
8,500	23.9	266.7	231	24732.7	297.9	172	25232.7	309.2	109	25809.0	246.4	221	24500.5	273.7	166	27210.1	306.4	105	28599.0
	26.7	272.2	236	24932.6	304.1	219	25432.6	315.5	162	26013.3	251.5	226	24682.6	279.3	214	27410.0	312.7	153	28808.0
	29.4	277.9	241	25004.8	310.4	265	25504.8	322.1	198	26086.8	256.8	231	24749.6	285.1	258	27482.2	319.2	193	28882.9
	32.2	283.6	246	25132.5	316.8	301	25632.5	328.7	238	26217.1	262.1	235	24866.6	291.0	298	27609.9	325.8	234	29016.2
9,300	23.9	273.9	247	25022.7	300.9	178	25522.7	310.2	110	26119.0	254.2	237	24750.5	278.2	175	27500.1	307.2	107	28909.0
	26.7	279.6	253	25222.6	307.1	230	25722.6	316.6	164	26323.3	259.4	242	24932.6	289.4	226	27700.0	313.5	156	29118.0
	29.4	285.4	258	25294.8	313.5	284	25794.8	323.1	205	26396.8	264.8	247	24999.6	295.4	274	27772.2	320.0	200	29192.9
	32.2	291.3	263	25422.5	320.0	311	25922.5	329.8	256	26527.1	270.4	253	25116.6	301.5	300	27899.9	326.6	252	29326.2
10,000	23.9	280.7	262	25312.7	303.7	187	25812.7	310.9	112	26429.0	261.7	253	25000.5	293.9	183	27800.1	308.9	108	29219.0
	26.7	286.5	268	25512.6	309.9	263	26012.6	317.3	170	26633.3	267.1	259	25182.6	300.0	258	28000.0	315.3	158	29428.0
	29.4	282.4	273	25584.8	316.3	281	26084.8	323.9	220	26706.8	272.6	264	25249.6	306.2	270	28072.2	321.8	209	29502.9
	32.2	298.5	279	25712.5	322.9	315	26212.5	330.6	260	26837.1	278.3	269	25366.6	312.5	310	28199.9	328.5	251	29636.2
11,000	23.9	285.9	276	25602.7	305.2	213	26102.7	313.9	114	26739.0	267.2	261	25250.5	297.2	190	28266.5	309.7	110	29529.0
	26.7	291.8	282	25802.6	311.5	259	26302.6	320.4	178	26943.3	272.7	266	25432.6	303.3	250	28355.4	316.1	171	29738.0
	29.4	297.9	288	25874.8	317.9	288	26374.8	327.0	225	27016.8	278.4	272	25499.6	309.6	279	28428.6	322.6	209	29812.9
	32.2	304.0	294	26002.5	324.5	317	26502.5	333.8	268	27147.1	284.2	277	25616.6	316.0	284	28499.7	329.3	256	29946.2

Notes:

1. All capacities are gross and have not considered indoor fan heat. To obtain net cooling capacity subtract indoor fan heat;

2. TC = Total Capacity (Unit: 1,000Btu/h); SC = Sensible Capacity (Unit: 1,000Btu/h).

KRFN880CFAN3

Cooling capacity: (Continued)

Gross Cooling Capacity																			
Ambient DB(°C)		40.6									46.1								
Indoor	WB(°C)	16.1			19.4			22.8			16.1			19.4			22.8		
CFM	DB(°C)	TC	SC	PI	TC	SC	PI	TC	SC	PI	TC	SC	PI	TC	SC	PI	TC	SC	PI
8,500	23.9	225.7	211	26487.9	265.2	158	29197.5	298.9	100	32028.6	198.2	194	28475.3	235.7	141	31184.9	280.4	87.9	36055.2
	26.7	230.4	215	26670.0	270.7	205	29397.4	305.1	147	32245.5	202.5	198	28657.4	240.7	190	31384.8	286.4	136	36279.1
	29.4	235.2	220	26737.0	276.3	254	29469.6	311.4	187	32322.5	206.9	202	28724.4	245.9	238	31457.0	292.4	175	36355.6
	32.2	240.1	225	26854.0	282.0	278	29597.3	317.8	223	32460.3	211.4	207	28841.4	251.2	243	31584.7	298.6	204	36496.3
9,300	23.9	233.9	227	26737.9	271.7	168	29487.5	300.9	102	32338.6	205.4	198	28725.3	240.4	151	31474.9	282.7	89.7	36365.2
	26.7	238.8	232	26920.0	277.3	220	29687.4	307.1	153	32555.5	209.9	202	28907.4	245.6	203	31674.8	288.7	143	36589.1
	29.4	243.8	237	26987.0	283.1	269	29759.6	313.5	193	32632.5	214.4	207	28974.4	250.8	246	31747.0	294.8	178	36665.6
	32.2	248.9	242	27104.0	288.9	284	29887.3	320.0	249	32770.3	219.0	211	29091.4	256.2	251	31874.7	301.0	235	36806.3
10,000	23.9	238.9	223	26987.9	275.9	175	29787.5	302.4	104	32648.6	213.2	208	28975.3	246.4	159	31774.9	284.4	91.7	36675.2
	26.7	243.9	228	27170.0	281.6	235	29987.4	308.7	153	32865.5	217.8	212	29157.4	251.7	218	31974.8	290.4	142	36899.1
	29.4	249.0	232	27237.0	287.5	265	30059.6	315.0	199	32942.5	222.5	217	29224.4	257.1	251	32047.0	296.6	185	36975.6
	32.2	254.2	237	27354.0	293.4	281	30187.3	321.6	246	33080.3	227.3	222	29341.4	262.6	259	32174.7	302.9	231	37116.3
11,000	23.9	248.2	242	27237.9	280.2	184	30253.9	303.9	105	32958.6	221.9	218	29225.3	252.9	168	32241.3	285.2	93.2	36985.2
	26.7	253.3	248	27420.0	286.0	246	30342.8	310.2	164	33175.5	226.7	223	29407.4	258.3	231	32330.2	291.2	150	37209.1
	29.4	258.6	253	27487.0	291.9	269	30414.9	316.6	200	33252.5	231.6	228	29474.4	263.8	258	32402.3	297.4	185	37285.6
	32.2	264.0	258	27604.0	297.9	280	30487.1	323.1	245	33390.3	236.6	233	29591.4	269.5	264	32474.5	303.7	232	37426.3

Notes:

1. All capacities are gross and have not considered indoor fan heat. To obtain net cooling capacity subtract indoor fan heat;

2. TC = Total Capacity (Unit: 1,000Btu/h); SC = Sensible Capacity (Unit: 1,000Btu/h).

KRFN880CFAN3

Cooling capacity: (Continued)

Gross Cooling Capacity																			
Ambient DB(°C)		48									51.7								
Indoor	WB(°C)	16.1			19.4			22.8			16.1			19.4			22.8		
CFM	DB(°C)	TC	SC	PI	TC	SC	PI	TC	SC	PI	TC	SC	PI	TC	SC	PI	TC	SC	PI
8,500	23.9	195.5	191	29071.5	233.0	139	31781.1	277.7	85.2	36798.7	175.5	172	30462.7	209.6	124	33172.3	250.3	75.3	38458.3
	26.7	199.8	195	29253.6	238.0	188	31981.0	283.7	133	37018.0	179.5	176	30644.8	214.2	169	33372.2	255.7	119	38679.8
	29.4	204.2	200	29320.6	243.2	235	32053.2	289.7	172	37096.8	183.5	179	30711.8	218.9	211	33444.4	261.3	154	38753.7
	32.2	208.7	204	29437.6	248.5	240	32180.9	295.9	202	37236.4	187.5	183	30828.8	223.7	216	33572.1	266.9	181	38892.1
9,300	23.9	202.7	195	29321.5	237.7	148	32071.1	280.0	87.0	37108.7	182.1	175	30712.7	213.9	132	33462.3	252.4	76.9	38768.3
	26.7	207.2	200	29503.6	242.9	200	32271.0	286.0	140	37328.0	186.2	179	30894.8	218.6	180	33662.2	257.8	125	38989.8
	29.4	211.7	204	29570.6	248.1	243	32343.2	292.1	175	37406.8	190.3	183	30961.8	223.4	219	33734.4	263.4	157	39063.7
	32.2	216.3	208	29687.6	253.5	248	32470.9	298.3	233	37546.4	194.5	187	31078.8	228.3	224	33862.1	269.1	209	39202.1
10,000	23.9	210.5	205	29571.5	243.7	157	32371.1	281.7	89.0	37418.7	189.2	184	30962.7	219.4	140	33762.3	253.9	78.7	39078.3
	26.7	215.1	210	29753.6	249.0	215	32571.0	287.7	139	37638.0	193.4	189	31144.8	224.2	193	33962.2	259.4	124	39299.8
	29.4	219.8	214	29820.6	254.4	248	32643.2	293.9	183	37716.8	197.6	193	31211.8	229.1	223	34034.4	265.0	164	39373.7
	32.2	224.6	219	29937.6	259.9	256	32770.9	300.2	228	37856.4	202.0	197	31328.8	234.1	231	34162.1	270.7	205	39512.1
11,000	23.9	219.2	216	29821.5	250.2	165	32837.5	282.5	90.5	37728.7	197.1	194	31212.7	225.3	148	34228.7	254.6	80.1	39388.3
	26.7	224.0	220	30003.6	255.6	229	32926.4	288.5	148	37948.0	201.5	198	31394.8	230.2	206	34317.5	260.1	132	39609.8
	29.4	228.9	225	30070.6	261.1	256	32998.6	294.7	183	38026.8	205.9	202	31461.8	235.2	230	34389.7	265.7	164	39683.7
	32.2	233.9	230	30187.6	266.8	261	33070.7	301.0	229	38166.4	210.5	207	31578.8	240.4	235	34461.9	271.5	206	39822.1

Notes:

1. All capacities are gross and have not considered indoor fan heat. To obtain net cooling capacity subtract indoor fan heat;

2. TC = Total Capacity (Unit: 1,000Btu/h); SC = Sensible Capacity (Unit: 1,000Btu/h).

KRFN1050CFAN3

Cooling capacity:

Gross Cooling Capacity																			
Ambient DB(°C)		29.4									35								
Indoor	WB(°C)	16.1			19.4			22.8			16.1			19.4			22.8		
CFM	DB(°C)	TC	SC	PI	TC	SC	PI	TC	SC	PI	TC	SC	PI	TC	SC	PI	TC	SC	PI
10,000	23.9	319.7	262	28343.2	357.8	210	31730.7	377.7	147	32822.2	300.0	250	28735.9	345.7	201	33314.0	368.5	141	34967.1
	26.7	323.6	309	28952.0	362.1	255	31948.1	384.9	195	33274.4	307.2	297	32566.0	350.5	246	34000.0	372.9	188	35329.2
	29.4	337.7	329	30195.7	366.1	297	32130.7	389.7	234	33900.6	321.5	316	31756.2	355.2	290	34666.9	377.5	230	35881.8
	32.2	356.7	347	31830.7	371.2	342	32348.2	394.4	271	34283.2	342.5	337	33537.9	362.1	335	34886.1	382.6	269	36491.6
12,000	23.9	328.2	276	28543.2	368.3	219	32030.7	382.0	150	33222.2	303.7	264	28935.9	352.8	261	33614.0	371.2	144	35367.1
	26.7	335.2	328	29152.0	370.8	264	32248.1	387.2	199	33674.4	343.9	307	32766.0	360.0	309	34300.0	375.0	194	35729.2
	29.4	349.5	343	30395.7	372.9	312	32430.7	394.4	239	34300.6	335.4	330	31956.2	367.0	333	34966.9	380.8	236	36281.8
	32.2	368.3	356	32030.7	375.4	356	32648.2	398.8	276	34683.2	354.1	348	33737.9	369.3	344	35186.1	387.2	279	36891.6
13,500	23.9	331.9	290	28743.2	372.7	223	32330.7	386.8	153	33622.2	314.3	279	29135.9	371.6	264	33914.0	374.4	147	35767.1
	26.7	340.2	331	29352.0	375.6	271	32548.1	392.0	201	34074.4	321.5	316	32966.0	374.3	281	34600.0	379.1	197	36129.2
	29.4	361.3	351	30595.7	377.7	321	32730.7	396.5	243	34700.6	344.9	339	32156.2	376.6	325	35266.9	383.9	241	36681.8
	32.2	377.7	367	32230.7	380.6	350	32948.2	401.3	272	35083.2	363.6	357	33937.9	378.6	350	35486.1	386.2	286	37291.6
14,800	23.9	344.9	302	28943.2	375.6	228	32630.7	392.0	155	34022.2	321.5	290	29335.9	372.8	274	34214.0	381.6	149	36167.1
	26.7	349.5	340	29552.0	377.7	279	32848.1	398.2	203	34474.4	333.1	328	33166.0	377.6	312	34900.0	388.8	200	36529.2
	29.4	368.5	358	30795.7	382.6	330	33030.7	402.9	246	35100.6	354.1	348	32356.2	380.7	330	35566.9	393.4	246	37081.8
	32.2	382.6	372	32430.7	384.9	362	33248.2	407.7	293	35483.2	370.8	364	34137.9	396.3	373	35786.1	398.2	293	37691.6

Notes:

1. All capacities are gross and have not considered indoor fan heat. To obtain net cooling capacity subtract indoor fan heat;

2. TC = Total Capacity (Unit: 1,000Btu/h); SC = Sensible Capacity (Unit: 1,000Btu/h).

KRFN1050CFAN3

Cooling capacity: (Continued)

Gross Cooling Capacity																			
Ambient DB(°C)		40.6									46.1								
Indoor	WB(°C)	16.1			19.4			22.8			16.1			19.4			22.8		
CFM	DB(°C)	TC	SC	PI	TC	SC	PI	TC	SC	PI	TC	SC	PI	TC	SC	PI	TC	SC	PI
10,000	23.9	279.3	239	35380.5	319.7	191	39383.2	362.5	135	44851.9	271.5	235	34444.3	326.8	230	40609.3	344.7	134	43641.9
	26.7	286.5	279	36267.6	324.6	236	40257.9	365.0	180	45135.2	281.0	267	36221.9	331.4	259	41504.3	349.5	179	44226.1
	29.4	300.8	293	39187.5	331.5	281	41428.3	367.3	224	45443.2	304.8	291	39180.4	333.7	303	41827.5	354.3	224	44512.0
	32.2	324.6	316	40949.2	334.0	328	42019.7	369.6	265	46022.3	328.6	314	42138.9	338.6	328	42672.8	356.7	268	44822.8
12,000	23.9	288.8	255	35580.5	322.1	219	39683.2	367.3	137	45251.9	278.7	249	34644.3	329.1	239	40909.3	354.3	140	44041.9
	26.7	296.0	288	36467.6	329.2	248	40557.9	369.6	186	45535.2	293.0	276	36421.9	336.3	271	41804.3	359.0	187	44626.1
	29.4	319.7	311	39387.5	338.7	297	41728.3	372.1	231	45843.2	316.8	299	39380.4	338.9	320	42127.5	361.3	233	44912.0
	32.2	334.0	325	41149.2	343.5	338	42319.7	376.8	276	46422.3	340.6	322	42338.9	345.7	324	42972.8	363.8	278	45222.8
13,500	23.9	293.6	269	35780.5	338.7	206	39983.2	372.1	140	45651.9	285.9	261	34844.3	345.7	254	41209.3	361.3	142	44441.9
	26.7	305.4	301	36667.6	343.5	260	40857.9	374.4	192	45935.2	290.9	275	36621.9	350.6	287	42104.3	363.8	192	45026.1
	29.4	331.5	326	39587.5	348.3	312	42028.3	376.8	237	46243.2	311.2	288	39580.4	357.5	327	42427.5	366.1	242	45312.0
	32.2	353.0	343	41349.2	353.0	347	42619.7	378.7	283	46822.3	352.4	327	42538.9	365.8	331	43272.8	368.5	292	45622.8
14,800	23.9	300.8	279	35980.5	345.8	213	40283.2	374.4	142	46051.9	293.0	260	35044.3	352.9	261	41509.3	363.8	202	44841.9
	26.7	317.4	312	36867.6	350.7	269	41157.9	376.8	195	46335.2	312.0	298	36821.9	357.5	319	42404.3	366.1	229	45426.1
	29.4	341.2	335	39787.5	355.3	326	42328.3	379.1	243	46643.2	338.1	323	39780.4	362.4	330	42727.5	368.5	247	45712.0
	32.2	360.1	354	41549.2	364.0	354	42919.7	383.9	295	47222.3	359.5	344	42738.9	369.7	337	43572.8	371.0	297	46022.8

Notes:

1. All capacities are gross and have not considered indoor fan heat. To obtain net cooling capacity subtract indoor fan heat;

2. TC = Total Capacity (Unit: 1,000Btu/h); SC = Sensible Capacity (Unit: 1,000Btu/h).

KRFN1050CFAN3

Cooling capacity: (Continued)

Gross Cooling Capacity																			
Ambient DB(°C)		48									51.7								
Indoor	WB(°C)	16.1			19.4			22.8			16.1			19.4			22.8		
CFM	DB(°C)	TC	SC	PI	TC	SC	PI	TC	SC	PI	TC	SC	PI	TC	SC	PI	TC	SC	PI
10,000	23.9	269.5	233	35335.6	324.8	228	41708.3	342.7	132	44844.6	245.9	227	38351.3	289.2	177	44188.2	325.9	123	50727.1
	26.7	279.0	265	37172.1	329.4	257	42630.0	347.5	177	45448.2	255.0	232	40457.5	293.8	219	45256.5	330.4	167	51429.1
	29.4	302.8	289	40228.6	331.7	301	42966.9	352.3	222	45743.6	277.8	254	43937.2	296.1	262	45928.0	335.0	210	51764.9
	32.2	326.6	312	43285.2	336.6	326	43840.2	354.7	266	46064.7	297.5	273	47447.4	300.8	285	46645.3	337.3	252	52115.9
12,000	23.9	276.7	247	35535.6	327.1	237	42008.3	352.3	138	45244.6	252.6	234	38551.3	291.5	199	44488.2	335.0	126	51127.1
	26.7	291.0	274	37372.1	334.3	269	42930.0	357.0	185	45848.2	266.4	263	40657.5	298.5	231	45556.5	339.6	175	51829.1
	29.4	314.8	297	40428.6	336.9	318	43266.9	359.3	231	46143.6	289.2	285	44137.2	302.9	278	46228.0	341.8	218	52164.9
	32.2	338.6	320	43485.2	343.7	322	44140.2	361.8	276	46464.7	312.2	307	47647.4	307.6	293	46945.3	344.1	262	52515.9
13,500	23.9	283.9	259	35735.6	343.7	252	42308.3	359.3	140	45644.6	259.6	246	38751.3	307.6	209	44788.2	341.8	131	51527.1
	26.7	288.9	273	37572.1	348.6	285	43230.0	361.8	190	46248.2	275.5	262	40857.5	312.2	241	45856.5	344.1	179	52229.1
	29.4	309.2	286	40628.6	355.5	325	43566.9	364.1	240	46543.6	300.8	286	44337.2	319.0	289	46528.0	346.4	227	52564.9
	32.2	350.4	343	43685.2	363.8	329	44440.2	366.5	290	46864.7	323.6	316	47847.4	326.5	317	47245.3	348.7	275	52915.9
14,800	23.9	291.0	258	35935.6	350.9	259	42608.3	361.8	200	46044.6	266.4	244	38951.3	314.3	197	45088.2	344.1	131	51927.1
	26.7	310.0	296	37772.1	355.5	317	43530.0	364.1	227	46648.2	284.7	278	41057.5	319.0	252	46156.5	346.4	186	52629.1
	29.4	336.1	321	40828.6	360.4	328	43866.9	366.5	245	46943.6	309.9	302	44537.2	323.6	307	46828.0	348.7	232	52964.9
	32.2	357.5	342	43885.2	367.7	335	44740.2	369.0	295	47264.7	330.4	312	48047.4	334.2	329	47545.3	351.1	280	53315.9

Notes:

1. All capacities are gross and have not considered indoor fan heat. To obtain net cooling capacity subtract indoor fan heat;

2. TC = Total Capacity (Unit: 1,000Btu/h); SC = Sensible Capacity (Unit: 1,000Btu/h).

6. Electrical data

Model	Power Supply			Compressor				Eva.Fan Motor			Con. Fan Motor		
	MCA	TOCA	MFA	STC	RNC	IPT	Qty	RNC	IPT	Qty	RNC (Each)	IPT (Each)	Qty.
KRFN220CFAN3	23.5	28.9	33.2	75	9.7	5.65	1	7.22	1.62	1	3.65	0.83	1
KRFN260CFAN3	29.4	36.5	43.7	121.2	14.3	8.08	1	7.18	1.61	1	3.93	0.88	1
KRFN300CFAN3	29.6	36.3	47.2	62	8.8	5.13	2	2.90	1.39	1	3.93	0.88	1
KRFN350CFAN3	30.2	37.3	49.4	66	9.6	5.7	2	3.50	1.84	1	2.51	0.98	1
KRFN440CFAN3	41.5	52.9	66.4	64+139	8.3+16.6	4.75+9.16	2	4.84	2.03	1	3.66	0.83	1
KRFN530CFAN3	45.4	58.1	72.4	64+144	8.3+18.7	4.75+10.8	2	7.50	3.97	1	2.80	1.27	1
KRFN600CFAN3	57.4	68.1	90.6	139	16.6	9.16	2	6.60	3.03	1	3.53	0.80	2
KRFN700CFAN3	64.1	77.9	101.5	144	18.7	10.8	2	8.90	4.35	1	2.84	1.29	2
KRFN880CFAN3	74.7	93.4	116.0	158	20.66	12.1	2	9.70	4.4	1	3.71	2.07	2
KRFN1050CFAN3	84.3	104.6	133.4	197	24.52	13.7	2	13.6	7.4	1	3.71	2.07	2

Notes:

MCA: Min. Current Amps. (A) TOCA: Total Over-current Amps. (A) MFA: Max. Fuse Amps (A)

STC: Starting Current (A); RNC: Running Current (A); IPT: Input Power (kW); Qty: Quantity

Voltage imbalance between each phases should be <2%.

7. Fan performance data

KRFN220CFAN3

Static Pressure	Item	High speed	Medium speed	Low speed
0Pa	Fan speed (rpm)	1,001	901	810
	Power input (W)	1,665	1,386	1,164
	Air flow (CFM)	3,001	2,647	2,356
50Pa	Fan speed (rpm)	1,063	972	899
	Power input (W)	1,607	1,341	1,133
	Air flow (CFM)	2,909	2,564	2,270
75Pa	Fan speed (rpm)	1,098	1,016	946
	Power input (W)	1,582	1,317	1,120
	Air flow (CFM)	2,825	2,503	2,190
100Pa	Fan speed (rpm)	1,122	1,047	977
	Power input (W)	1,526	1,280	1,079
	Air flow (CFM)	2,759	2,401	2,105
150Pa	Fan speed (rpm)	1,173	1,106	/
	Power input (W)	1,452	1,230	/
	Air flow (CFM)	2,560	2,250	/
200Pa	Fan speed (rpm)	1,219	1,162	/
	Power input (W)	1,375	1,182	/
	Air flow (CFM)	2,367	2,109	/
250Pa	Fan speed (rpm)	1,265	/	/
	Power input (W)	1,305	/	/
	Air flow (CFM)	2,182	/	/

Notes: The unit only has one speed of indoor side fan, and high speed is the factory default. If the unit operating with other fan speed, the wiring between fan motor and main PCB board should be adjusted.

KRFN260CFAN3

Static Pressure	Item	High speed	Medium speed	Low speed
0Pa	Fan speed (rpm)	1,035	936	844
	Power input (W)	1,716	1,432	1,197
	Air flow (CFM)	3,074	2,697	2,403
50Pa	Fan speed (rpm)	1,081	991	909
	Power input (W)	1,652	1,409	1,160
	Air flow (CFM)	2,981	2,596	2,284
75Pa	Fan speed (rpm)	1,110	1,026	954
	Power input (W)	1,650	1,360	1,137
	Air flow (CFM)	2,951	2,574	2,223
100Pa	Fan speed (rpm)	1,127	1,051	984
	Power input (W)	1,591	1,377	1,126
	Air flow (CFM)	2,825	2,438	2,146
150Pa	Fan speed (rpm)	1,173	1,110	/
	Power input (W)	1,525	1,338	/
	Air flow (CFM)	2,657	2,313	/
200Pa	Fan speed (rpm)	1,217	1,165	/
	Power input (W)	1,449	1,281	/
	Air flow (CFM)	2,483	2,187	/
250Pa	Fan speed (rpm)	1,263	/	/
	Power input (W)	1,420	/	/
	Air flow (CFM)	2,331	/	/

Notes: The unit only has one speed of indoor side fan, and high speed is the factory default. If the unit operating with other fan speed, the wiring between fan motor and main PCB board should be adjusted.

Blower drive options						
Model	Motor			Blower		
	HP	rpm	Pulley pitch Dia. (inch)	Fan speed range (rpm)		Pulley pitch Dia. (inch)
				Min.	Max.	
KRFN300CFAN3	2	1,400	4.53~5.25	821	918	8.35
KRFN350CFAN3	2	1,400	4.53~5.25	931	1,016	7.48
KRFN440CFAN3	4	1,420	4.53~5.25	769	871	8.82
KRFN530CFAN3	5.3	1,440	4.53~5.25	949	1,112	7.48
KRFN600CFAN3	5.3	1,440	4.53~5.25	927	1,045	9.84
KRFN700CFAN3	5.3	1,440	4.53~5.25	1,081	1,284	5.91
KRFN880CFAN3	7.3	1,440	4.53~5.25	925	1,088	7.09
KRFN1050CFAN3	7.3	1,440	4.53~5.25	1,022	1,195	6.30

Example for selection process:

The following data are the rated design points for MRCT-085CWN1-R(C) rooftop packages:

Air flow = 3520CFM; External static pressure = 0.3in.w.g; Fan speed = 862rpm;

Power input = 1405W; The No. of turns = 1N.

To increase the ESP (External Static Pressure) to 0.4in.w.g, but maintain the airflow rate at 3500CFM, please follow the steps below:

Step 1: Selection of new desired point.

From the table data, select the point that can meet both of the requirements.

ESP = 0.4in.w.g;

Air flow rate (Near or equal to) ≈ 3500CFM.

Step 2: Read fan speed, power input:

Air flow = 3483CFM;

Fan speed = 896rpm;

Power input = 1400W.

Step 3: Read number of turns for variable pitch pulley.

Similarly, use this RPM value to read the No. of turns (N) by referring to the table of ‘Motor Variable Pitch Pulley Data’. The variable pitch pulley for motor shall be adjusted to this ‘N’ in order to get 3483cfm. First, adjust the motor pulley to 0 turns. Then, make 0.25 turns on the pulley. Cross check the dimension ‘X’, and it stands for regulation space of motor pulley. In this case, X = 1mm.

Pulley pitch factory set point: the table, No. of turns = 1.5N.

KRFN300CFAN3

ESP (Pa)	N	0	0.25	0.5	0.75	1	1.25	1.5	1.75	2
	X	**0.5**	**1**	**1.5**	**2**	**2.5**	**3**	**3.5**	**4**	**4.5**
0	**Fan speed (rpm)**	896	887	876	866	855	847	839	830	821
	Power input (W)	1,790	1,720	1,710	1,665	1,620	1,560	1,500	1,445	1,390
	Air flow (CFM)	4,320	4,213	4,166	4,130	4,094	4,041	3,988	3,946	3,905
25	**Fan speed (rpm)**	899	890	878	867	857	849	842	849	823
	Power input (W)	1,710	1,640	1,630	1,590	1,550	1,490	1,430	1,378	1,325
	Air flow (CFM)	4,134	4,035	3,987	3,943	3,899	3,855	3,810	3,761	3,713
50	**Fan speed (rpm)**	902	893	880	869	858	851	844	851	825
	Power input (W)	1,630	1,560	1,550	1,515	1,480	1,420	1,360	1,310	1,260
	Air flow (CFM)	3,947	3,858	3,808	3,756	3,705	3,669	3,632	3,577	3,521
75	**Fan speed (rpm)**	904	896	880	871	**862**	854	847	854	827
	Power input (W)	1,555	1,485	1,467	1,436	**1,405**	1,345	1,285	1,235	1,185
	Air flow (CFM)	3,770	3,675	3,620	3,570	**3,520**	3,470	3,420	3,364	3,307
100	**Fan speed (rpm)**	907	896	885	876	866	858	849	858	828
	Power input (W)	1,470	1,400	1,390	1,360	1,330	1,265	1,200	1,150	1,100
	Air flow (CFM)	3,582	3,483	3,428	3,321	3,215	3,215	3,215	3,154	3,092
125	**Fan speed (rpm)**	910	900	886	877	869	860	852	860	830
	Power input (W)	1,375	1,310	1,295	1,265	1,235	1,175	1,115	1,065	1,015
	Air flow (CFM)	3,362	3,266	3,206	3,122	3,039	3,005	2,971	2,901	2,831
150	**Fan speed (rpm)**	913	903	887	879	871	863	854	863	832
	Power input (W)	1,280	1,220	1,200	1,170	1,140	1,085	1,030	980	930
	Air flow (CFM)	3,141	3,048	2,984	2,924	2,864	2,795	2,727	2,649	2,570
175	**Fan speed (rpm)**	915	906	892	883	874	865	857	/	/
	Power input (W)	1,170	1,115	1,095	1,068	1,040	945	850	/	/
	Air flow (CFM)	2,851	2,761	2,683	2,619	2,555	2,325	2,094	/	/
200	**Fan speed (rpm)**	918	909	897	887	876	868	859	/	/
	Power input (W)	1,060	1,010	990	965	940	805	670	/	/
	Air flow (CFM)	2,560	2,473	2,383	2,315	2,246	1,854	1,462	/	/

Notes:

1. Legend: X – Regulation space of motor pulley (mm); N: Number of turns; ESP: External static pressure (in.w.g);

2: Pulley pitch factory set point: The table, No. of turns (N) = 5;

3. Bold data is the performance testing set point;

4. Shading data are rated airflow.

KRFN350CFAN3

ESP	N	0	0.25	0.5	0.75	1	1.25	1.5	1.75	2
(Pa)	X	0.5	1	1.5	2	2.5	3	3.5	4	4.5
0	Fan speed (rpm)	/	/	/	/	/	/	962	946	931
	Power input (W)	/	/	/	/	/	/	2,020	1,945	1,870
	Air flow (CFM)	/	/	/	/	/	/	4,571	4,500	4,428
25	Fan speed (rpm)	/	/	/	/	/	969	964	969	933
	Power input (W)	/	/	/	/	/	2,010	1,930	1,855	1,780
	Air flow (CFM)	/	/	/	/	/	4,442	4,398	4,323	4,248
50	Fan speed (rpm)	/	/	/	/	977	972	967	972	935
	Power input (W)	/	/	/	/	1,990	1,915	1,840	1,765	1,690
	Air flow (CFM)	/	/	/	/	4,320	4,272	4,224	4,146	4,067
75	Fan speed (rpm)	/	/	/	981	980	975	970	975	937
	Power input (W)	/	/	/	1,998	1,915	1,843	1,770	1,695	1,620
	Air flow (CFM)	/	/	/	4,214	4,183	4,127	4,072	3,997	3,922
100	Fan speed (rpm)	/	/	**986**	984	982	977	972	977	938
	Power input (W)	/	/	**2,000**	1,900	1,800	1,730	1,660	1,590	1,520
	Air flow (CFM)	/	/	**4,129**	4,052	3,974	3,905	3,835	3,771	3,707
125	Fan speed (rpm)	/	989	989	987	985	980	975	980	940
	Power input (W)	/	1,980	1,960	1,833	1,705	1,635	1,565	1,495	1,425
	Air flow (CFM)	/	3,953	4,065	3,927	3,789	3,719	3,648	3,579	3,509
150	Fan speed (rpm)	1,009	991	991	990	988	983	978	983	942
	Power input (W)	2,050	1,880	1,865	1,738	1,610	1,540	1,470	1,400	1,330
	Air flow (CFM)	3,830	3,778	3,891	3,748	3,605	3,532	3,460	3,386	3,312
175	Fan speed (rpm)	1,011	933	994	992	990	/	/	/	/
	Power input (W)	1,945	1,775	1,770	1,638	1,505	/	/	/	/
	Air flow (CFM)	3,656	3,586	3,718	3,549	3,381	/	/	/	/
200	Fan speed (rpm)	1,012	995	997	995	993	/	/	/	/
	Power input (W)	1,840	1,670	1,660	1,530	1,400	/	/	/	/
	Air flow (CFM)	3,481	3,394	3,517	3,337	3,157	/	/	/	/
225	Fan speed (rpm)	1,014	996	1,000	/	/	/	/	/	/
	Power input (W)	1,725	1,545	1,550	/	/	/	/	/	/
	Air flow (CFM)	3,292	3,148	3,316	/	/	/	/	/	/
250	Fan speed (rpm)	1,016	998	1,002	/	/	/	/	/	/
	Power input (W)	1,610	1,420	1,425	/	/	/	/	/	/
	Air flow (CFM)	3,104	2,902	3,048	/	/	/	/	/	/

Notes:

1. Legend: X – Regulation space of motor pulley (mm); N: Number of turns; ESP: External static pressure (in.w.g);

2: Pulley pitch factory set point: The table, No. of turns (N) = 5;

3. Bold data is the performance testing set point;

4. Shading data are rated airflow.

KRFN440CFAN3

ESP	N	0	0.25	0.5	0.75	1	1.25	1.5	1.75	2	2.25	2.5
(Pa)	X	0.5	1	1.5	2	2.5	3	3.5	4	4.5	5	5.5
0	Fan speed (rpm)	857	849	840	828	816	806	795	784	774	772	769
	Power input (W)	3,530	3,445	3,360	3,225	3,090	3,000	2,910	2,810	2,710	2,620	2,530
	Air flow (CFM)	6,773	6,718	6,662	6,575	6,487	6,395	6,302	6,230	6,158	6,103	6,049
25	Fan speed (rpm)	858	850	841	829	817	807	796	785	775	772	770
	Power input (W)	3,415	3,323	3,230	3,103	2,975	2,878	2,780	2,690	2,600	2,513	2,425
	Air flow (CFM)	6,571	6,503	6,435	6,354	6,272	6,176	6,079	6,004	5,929	5,872	5,815
50	Fan speed (rpm)	859	851	842	830	818	808	797	787	776	773	770
	Power input (W)	3,300	3,200	3,100	2,980	2,860	2,755	2,650	2,570	2,490	2,405	2,320
	Air flow (CFM)	6,368	6,288	6,208	6,133	6,057	5,956	5,856	5,778	5,699	5,641	5,582
75	Fan speed (rpm)	861	852	843	831	819	809	798	788	777	774	771
	Power input (W)	3,175	3,078	2,980	2,868	2,755	2,643	2,530	2,455	2,380	2,278	2,175
	Air flow (CFM)	6,151	6,069	5,987	5,901	5,814	5,711	5,608	5,534	5,461	5,363	5,265
700	Fan speed (rpm)	862	853	844	832	**821**	810	799	789	778	775	772
	Power input (W)	3,050	2,955	2,860	2,755	**2,650**	2,530	2,410	2,340	2,270	2,150	2,030
	Air flow (CFM)	5,933	5,850	5,766	5,669	**5,571**	5,465	5,359	5,291	5,222	5,085	4,948
125	Fan speed (rpm)	863	854	845	833	822	811	800	790	779	776	773
	Power input (W)	2,900	2,800	2,700	2,583	2,465	2,358	2,250	2,183	2,115	1,983	1,850
	Air flow (CFM)	5,645	5,538	5,432	5,361	5,290	5,179	5,067	4,977	4,887	4,694	4,500
150	Fan speed (rpm)	864	855	846	834	823	812	801	791	780	777	774
	Power input (W)	2,800	2,700	2,600	2,475	2,350	2,245	2,140	2,075	2,010	1,860	1,710
	Air flow (CFM)	5,456	5,347	5,238	5,169	5,101	4,978	4,856	4,754	4,652	4,398	4,144
175	Fan speed (rpm)	865	856	847	835	824	813	802	792	781	778	774
	Power input (W)	2,635	2,535	2,435	2,323	2,210	2,103	1,995	1,925	1,855	1,713	1,570
	Air flow (CFM)	5,187	5,066	4,946	4,870	4,794	4,656	4,519	4,397	4,275	4,031	3,788

Continued: KRFN440CFAN3

ESP	N	0	0.25	0.5	0.75	1	1.25	1.5	1.75	2	2.25	2.5
(Pa)	X	0.5	1	1.5	2	2.5	3	3.5	4	4.5	5	5.5
200	Fan speed (rpm)	866	857	848	836	825	814	804	793	782	/	/
	Power input (W)	2,470	2,370	2,270	2,170	2,070	1,960	1,850	1,775	1,700	/	/
	Air flow (CFM)	4,917	4,786	4,654	4,571	4,488	4,335	4,182	4,040	3,898	/	/
225	Fan speed (rpm)	868	859	849	837	826	815	805	794	783	/	/
	Power input (W)	2,295	2,203	2,110	2,000	1,890	1,788	1,685	1,608	1,530	/	/
	Air flow (CFM)	4,575	4,434	4,293	4,187	4,082	3,922	3,763	3,622	3,481	/	/
250	Fan speed (rpm)	869	860	850	838	827	816	806	795	784	/	/
	Power input (W)	2,120	2,035	1,950	1,830	1,710	1,615	1,520	1,440	1,360	/	/
	Air flow (CFM)	4,232	4,082	3,932	3,804	3,676	3,510	3,344	3,204	3,064	/	/
275	Fan speed (rpm)	870	861	851	839	828	/	/	/	/	/	/
	Power input (W)	1,950	1,855	1,760	1,675	1,590	/	/	/	/	/	/
	Air flow (CFM)	3,816	3,674	3,533	3,423	3,314	/	/	/	/	/	/

Notes:

1. Legend: X – Regulation space of motor pulley (mm); N: Number of turns; ESP: External static pressure (in.w.g);

2: Pulley pitch factory set point: The table, No. of turns (N) = 5;

3. Bold data is the performance testing set point;

4. Shading data are rated airflow.

KRFN530CFAN3

ESP	N	0	0.25	0.5	0.75	1	1.25	1.5	1.75	2
(Pa)	X	0.5	1	1.5	2	2.5	3	3.5	4	4.5
0	Fan speed (rpm)	/	/	1,008	999	989	979	969	959	949
	Power input (W)	/	/	5,146	4,968	4,790	4,575	4,360	4,155	3,950
	Air flow (CFM)	/	/	7,928	7,867	7,805	7,686	7,566	7,452	7,338
25	Fan speed (rpm)	/	/	1,014	1,003	991	983	974	964	953
	Power input (W)	/	/	5,043	4,824	4,605	4,418	4,230	4,025	3,820
	Air flow (CFM)	/	/	7,791	7,691	7,592	7,473	7,353	7,239	7,124
50	Fan speed (rpm)	/	1,022	1,020	1,006	993	986	979	968	957
	Power input (W)	/	4,954	4,940	4,680	4,420	4,260	4,100	3,895	3,690
	Air flow (CFM)	/	7,700	7,653	7,516	7,379	7,259	7,139	7,025	6,910
75	Fan speed (rpm)	1,031	1,026	1,022	1,009	995	989	982	971	960
	Power input (W)	4,870	4,810	4,750	4,495	4,240	4,088	3,935	3,745	3,555
	Air flow (CFM)	7,622	7,529	7,436	7,313	7,191	7,048	6,904	6,790	6,675
100	Fan speed (rpm)	1,035	1,028	1,021	**1,008**	995	988	982	971	959
	Power input (W)	4,770	4,665	4,560	**4,310**	4,060	3,915	3,770	3,595	3,420
	Air flow (CFM)	7,475	7,347	7,219	**7,111**	7,002	6,836	6,669	6,554	6,439
125	Fan speed (rpm)	1,050	1,044	1,039	1,026	1,013	1,006	998	990	981
	Power input (W)	4,510	4,440	4,370	4,123	3,875	3,760	3,645	3,465	3,285
	Air flow (CFM)	7,113	7,046	6,979	6,844	6,708	6,571	6,434	6,297	6,159
150	Fan speed (rpm)	1,060	1,056	1,052	1,039	1,026	1,021	1,015	1,005	995
	Power input (W)	4,350	4,290	4,230	4,005	3,780	3,695	3,610	3,410	3,210
	Air flow (CFM)	6,899	6,863	6,828	6,679	6,531	6,411	6,291	6,134	5,976
175	Fan speed (rpm)	1,070	1,065	1,060	1,049	1,039	1,032	1,025	1,017	1,008
	Power input (W)	4,170	4,078	3,985	9,808	3,630	3,518	3,405	3,248	3,090
	Air flow (CFM)	6,658	6,609	6,559	6,419	6,279	6,161	6,043	5,859	5,675

Continued: KRFN530CFAN3

ESP	N	0	0.25	0.5	0.75	1	1.25	1.5	1.75	2
(Pa)	X	0.5	1	1.5	2	2.5	3	3.5	4	4.5
200	Fan speed (rpm)	1,082	1,074	1,067	1,059	1,051	1,044	1,036	1,028	1,020
	Power input (W)	3,990	3,865	3,740	3,610	3,480	3,340	3,200	3,085	2,970
	Air flow (CFM)	6,418	6,354	6,291	6,159	6,027	5,911	5,794	5,584	5,375
225	Fan speed (rpm)	1,089	1,082	1,074	1,065	1,056	1,048	1,040	1,033	1,027
	Power input (W)	3,855	3,728	3,600	3,455	3,310	3,180	3,050	2,928	2,805
	Air flow (CFM)	6,194	6,108	6,022	5,879	5,736	5,600	5,464	5,269	5,075
250	Fan speed (rpm)	1,097	1,089	1,082	1,072	1,061	1,053	1,044	1,038	1,033
	Power input (W)	3,720	3,590	3,460	3,300	3,140	3,020	2,900	2,770	2,640
	Air flow (CFM)	5,971	5,862	5,754	5,600	5,446	5,289	5,133	4,954	4,776
275	Fan speed (rpm)	1,104	1,095	1,086	1,076	1,065	/	/	/	/
	Power input (W)	3,595	3,438	3,280	3,115	2,950	/	/	/	/
	Air flow (CFM)	5,705	5,585	5,464	5,308	5,151	/	/	/	/
300	Fan speed (rpm)	1,112	/	/	/	/	/	/	/	/
	Power input (W)	3,470	/	/	/	/	/	/	/	/
	Air flow (CFM)	5,439	/	/	/	/	/	/	/	/
325	Fan speed (rpm)	1,112	/	/	/	/	/	/	/	/
	Power input (W)	3,470	/	/	/	/	/	/	/	/
	Air flow (CFM)	5,439	/	/	/	/	/	/	/	/

Notes:

1. Legend: X – Regulation space of motor pulley (mm); N: Number of turns; ESP: External static pressure (in.w.g);

2: Pulley pitch factory set point: The table, No. of turns (N) = 5;

3. Bold data is the performance testing set point;

4. Shading data are rated airflow.

KRFN600CFAN3

ESP	N	0	0.25	0.5	0.75	1	1.25	1.5	1.75	2	2.25	2.5
(Pa)	X	0.5	1	1.5	2	2.5	3	3.5	4	4.5	5	5.5
0	Fan speed (rpm)	/	/	994	987	980	971	961	953	944	936	927
	Power input (W)	/	/	4,751	4,857	4,962	4,643	4,323	4,216	4,109	3,960	3,811
	Air flow (CFM)	/	/	9,837	9,896	9,955	9,722	9,489	9,498	9,507	9,346	9,185
25	Fan speed (rpm)	/	/	994	988	981	972	963	954	946	937	928
	Power input (W)	/	/	4,580	4,683	4,787	4,494	4,202	4,078	3,955	3,809	3,664
	Air flow (CFM)	/	/	9,575	9,635	9,695	9,506	9,317	9,264	9,211	9,041	8,871
50	Fan speed (rpm)	1,010	1,003	995	988	982	973	965	956	947	939	930
	Power input (W)	4,581	4,495	4,408	4,510	4,612	4,346	4,080	3,940	3,800	3,659	3,517
	Air flow (CFM)	9,591	9,451	9,312	9,373	9,434	9,290	9,145	9,030	8,915	8,736	8,557
75	Fan speed (rpm)	1,012	1,004	997	990	983	975	966	958	949	940	931
	Power input (W)	4,392	4,313	4,235	4,338	4,442	4,181	3,920	3,777	3,635	3,495	3,356
	Air flow (CFM)	9,307	9,153	8,998	9,067	9,136	8,999	8,861	8,729	8,597	8,421	8,246
100	Fan speed (rpm)	1,013	1,005	998	991	984	976	968	959	951	942	933
	Power input (W)	4,202	4,132	4,061	4,166	4,271	4,015	3,759	3,614	3,469	3,332	3,194
	Air flow (CFM)	9,024	8,854	8,683	8,761	8,839	8,708	8,578	8,429	8,279	8,107	7,934
125	Fan speed (rpm)	1,015	1,007	999	992	985	977	969	961	952	943	934
	Power input (W)	4,005	3,934	3,864	3,967	4,071	3,810	3,550	3,404	3,258	3,127	2,996
	Air flow (CFM)	8,684	8,510	8,336	8,421	8,507	8,350	8,194	8,027	7,860	7,684	7,507
150	Fan speed (rpm)	1,018	1,009	1,000	994	987	979	**971**	962	954	945	935
	Power input (W)	3,807	3,737	3,667	3,769	3,870	3,605	**3,340**	3,193	3,046	2,922	2,797
	Air flow (CFM)	8,345	8,167	7,989	8,082	8,175	7,992	**7,809**	7,625	7,441	7,261	7,081
175	Fan speed (rpm)	1,019	1,011	1,002	995	988	980	972	964	955	946	937
	Power input (W)	3,570	3,509	3,448	3,548	3,649	3,374	3,100	2,950	2,801	2,682	2,564
	Air flow (CFM)	7,899	7,719	7,539	7,648	7,757	7,518	7,279	7,093	6,907	9,715	6,522

Continued: KRFN600CFAN3

ESP	N	0	0.25	0.5	0.75	1	1.25	1.5	1.75	2	2.25	2.5
(Pa)	X	0.5	1	1.5	2	2.5	3	3.5	4	4.5	5	5.5
200	Fan speed (rpm)	1,021	1,012	1,004	998	992	983	974	965	957	947	938
	Power input (W)	3,332	3,281	3,229	3,328	3,427	3,143	2,859	2,707	2,555	2,443	2,330
	Air flow (CFM)	7,454	7,272	7,090	7,215	7,339	7,044	6,748	6,561	6,374	6,169	5,963
225	Fan speed (rpm)	1,033	1,019	1,006	1,000	994	/	/	/	/	/	/
	Power input (W)	3,042	3,135	3,229	3,128	3,026	/	/	/	/	/	/
	Air flow (CFM)	6,817	6,953	7,090	6,696	6,303	/	/	/	/	/	/
250	Fan speed (rpm)	1,045	/	/	/	/	/	/	/	/	/	/
	Power input (W)	2,751	/	/	/	/	/	/	/	/	/	/
	Air flow (CFM)	6,180	/	/	/	/	/	/	/	/	/	/

Notes:

1. Legend: X – Regulation space of motor pulley (mm); N: Number of turns; ESP: External static pressure (in.w.g);

2: Pulley pitch factory set point: The table, No. of turns (N) = 5;

3. Bold data is the performance testing set point;

4. Shading data are rated airflow.

KRFN700CFAN3

ESP	N	0	0.25	0.5	0.75	1	1.25	1.5	1.75	2	2.25	2.5	2.75	3
(Pa)	X	0.5	1	1.5	2	2.5	3	3.5	4	4.5	5	5.5	6	6.5
0	Fan speed (rpm)	/	/	/	/	1,194	1,181	1,168	1,154	1,140	1,127	1,113	1,098	1,081
	Power input (W)	/	/	/	/	6,951	6,710	6,468	6,266	6,063	5,831	5,599	5,422	5,188
	Air flow (CFM)	/	/	/	/	11,210	11,104	10,997	10,872	10,746	10,623	10,499	10,306	10,078
25	Fan speed (rpm)	/	/	/	/	1,195	1,182	1,169	1,155	1,141	1,128	1,114	1,100	1,083
	Power input (W)	/	/	/	/	6,756	6,531	6,306	6,103	5,901	5,671	5,442	5,255	5,057
	Air flow (CFM)	/	/	/	/	10,982	10,890	10,798	10,668	10,539	10,398	10,258	10,068	9,892
50	Fan speed (rpm)	/	/	/	1,214	1,196	1,183	1,170	1,156	1,142	1,129	1,115	1,101	1,084
	Power input (W)	/	/	/	6,944	6,561	6,352	6,143	5,941	5,738	5,512	5,285	5,088	4,926
	Air flow (CFM)	/	/	/	10,877	10,754	10,676	10,599	10,465	10,332	10,174	10,016	9,829	9,705
75	Fan speed (rpm)	/	/	/	1,214	1,197	1,184	1,171	1,157	1,143	1,130	1,116	1,102	1,085
	Power input (W)	/	/	/	6,738	6,390	6,180	5,970	5,754	5,539	5,328	5,118	5,069	4,748
	Air flow (CFM)	/	/	/	10,628	10,540	10,453	10,367	10,207	10,047	9,898	9,749	9,807	9,403
100	Fan speed (rpm)	/	1,240	1,228	1,215	1,198	1,185	1,172	1,158	1,145	1,131	1,117	1,103	1,087
	Power input (W)	/	6,941	6,765	6,532	6,218	6,008	5,797	5,568	5,339	5,145	4,950	5,049	4,570
	Air flow (CFM)	/	10,582	10,491	10,378	10,326	10,230	10,135	9,948	9,761	9,622	9,483	9,785	9,102
125	Fan speed (rpm)	/	1,241	1,230	1,215	1,199	1,186	1,173	1,159	1,146	1,131	1,117	1,105	**1,091**
	Power input (W)	/	6,753	6,659	6,367	6,068	5,866	5,663	5,441	5,218	5,013	4,808	4,570	**4,351**
	Air flow (CFM)	/	10,357	10,349	10,170	10,113	10,017	9,922	9,753	9,584	9,435	9,285	9,024	**8,815**
150	Fan speed (rpm)	1,258	1,242	1,230	1,216	1,202	1,189	1,175	1,162	1,149	1,134	1,120	1,105	1,091
	Power input (W)	6,736	6,565	6,360	6,158	5,820	5,611	5,401	5,180	4,958	4,769	4,579	4,327	4,141
	Air flow (CFM)	10,287	10,132	10,049	9,952	9,818	9,692	9,566	9,395	9,224	9,069	8,915	8,599	8,418

Continued: KRFN700CFAN3

ESP	N	0	0.25	0.5	0.75	1	1.25	1.5	1.75	2	2.25	2.5	2.75	3
(Pa)	X	0.5	1	1.5	2	2.5	3	3.5	4	4.5	5	5.5	6	6.5
175	Fan speed (rpm)	1,261	1,244	1,232	1,218	1,204	1,190	1,177	1,163	1,149	1,135	1,121	1,106	1,093
	Power input (W)	6,511	6,332	6,169	5,929	5,607	5,391	5,175	4,953	4,731	4,545	4,358	4,107	3,925
	Air flow (CFM)	10,042	9,864	9,794	9,650	9,524	9,377	9,231	9,046	8,861	8,699	8,537	8,243	8,045
200	Fan speed (rpm)	1,263	1,245	1,233	1,221	1,205	1,192	1,179	1,164	1,150	1,136	1,123	1,106	1,094
	Power input (W)	6,285	6,099	5,977	5,700	5,394	5,172	4,949	4,727	4,504	4,321	4,137	3,887	3,709
	Air flow (CFM)	9,798	9,597	9,540	9,347	9,230	9,063	8,896	8,697	8,497	8,328	8,158	7,887	7,672
225	Fan speed (rpm)	1,264	1,248	1,235	1,222	1,207	1,194	1,181	1,166	1,152	1,138	1,124	1,110	1,096
	Power input (W)	6,046	5,871	5,696	5,451	5,160	4,923	4,686	4,461	4,237	4,049	3,861	3,624	3,433
	Air flow (CFM)	9,505	9,301	9,183	9,019	8,877	8,693	8,508	8,291	8,074	7,871	7,669	7,387	7,138
250	Fan speed (rpm)	1,265	1,251	1,237	1,224	1,209	1,196	1,183	1,169	1,154	1,140	1,126	1,113	1,099
	Power input (W)	5,807	5,643	5,415	5,201	4,925	4,674	4,422	4,196	3,969	3,777	3,585	3,361	3,157
	Air flow (CFM)	9,212	9,004	8,826	8,691	8,524	8,322	8,120	7,885	7,650	7,415	7,180	6,887	6,605
275	Fan speed (rpm)	1,267	1,253	1,239	1,226	1,211	1,198	1,185	1,171	1,157	1,144	1,130	1,117	1,094
	Power input (W)	5,523	5,350	5,120	4,872	4,585	4,322	4,059	3,812	3,564	3,331	3,098	2,800	2,662
	Air flow (CFM)	8,831	8,594	8,380	8,204	8,010	7,740	7,470	7,173	6,876	6,487	6,099	5,562	5,395
300	Fan speed (rpm)	1,269	1,254	1,242	1,228	1,213	1,201	1,188	1,174	1,160	1,147	1,134	1,120	1,088
	Power input (W)	5,238	5,056	4,825	4,542	4,245	3,971	3,696	3,428	3,159	2,885	2,611	2,239	2,167
	Air flow (CFM)	8,450	8,184	7,933	7,717	7,495	7,157	6,819	8,460	6,102	5,560	5,018	4,237	4,186
325	Fan speed (rpm)	1,272	1,258	1,245	1,233	1,218	1,206	1,193	/	/	/	/	/	/
	Power input (W)	4,892	4,650	4,334	3,987	3,707	3,334	2,961	/	/	/	/	/	/
	Air flow (CFM)	7,955	7,559	7,136	6,775	6,406	5,820	5,234	/	/	/	/	/	/

Continued: KRFN700CFAN3

ESP	N	0	0.25	0.5	0.75	1	1.25	1.5	1.75	2	2.25	2.5	2.75	3
(Pa)	X	0.5	1	1.5	2	2.5	3	3.5	4	4.5	5	5.5	6	6.5
350	Fan speed (rpm)	1,276	1,262	1,248	1,235	1,223	/	/	/	/	/	/	/	/
	Power input (W)	4,546	4,243	3,842	3,731	3,169	/	/	/	/	/	/	/	/
	Air flow (CFM)	7,459	6,935	6,339	6,285	5,318	/	/	/	/	/	/	/	/
375	Fan speed (rpm)	1,280	1,267	1,254	/	/	/	/	/	/	/	/	/	/
	Power input (W)	3,982	3,457	3,371	/	/	/	/	/	/	/	/	/	/
	Air flow (CFM)	6,465	5,433	5,387	/	/	/	/	/	/	/	/	/	/
400	Fan speed (rpm)	1,284	/	/	/	/	/	/	/	/	/	/	/	/
	Power input (W)	3,417	/	/	/	/	/	/	/	/	/	/	/	/
	Air flow (CFM)	5,471	/	/	/	/	/	/	/	/	/	/	/	/

Notes:

1. Legend: X – Regulation space of motor pulley (mm); N: Number of turns; ESP: External static pressure (in.w.g);

2: Pulley pitch factory set point: The table, No. of turns (N) = 5;

3. Bold data is the performance testing set point;

4. Shading data are rated airflow.

KRFN880CFAN3

ESP	N	0	0.25	0.5	0.75	1	1.25	1.5	1.75	2	2.25	2.5	2.75	3
(Pa)	X	0.5	1	1.5	2	2.5	3	3.5	4	4.5	5	5.5	6	6.5
0	Fan speed (rpm)	1,075	1,059	1,044	1,034	1,026	1,009	1,002	985	973	963	934	939	925
	Power input (W)	6,962	6,840	6,589	6,382	6,068	5,930	5,651	5,544	5,232	5,085	4,765	4,893	4,734
	Air flow (CFM)	12,304	12,345	12,115	12,068	11,907	11,717	11,587	11,472	11,269	11,177	10,868	10,894	10,757
25	Fan speed (rpm)	1,075	1,060	1,041	1,035	1,027	1,010	1,003	986	974	964	935	939	926
	Power input (W)	6,750	6,663	6,363	6,203	5,914	5,736	5,487	5,374	5,065	4,905	4,632	4,740	4,597
	Air flow (CFM)	12,052	12,092	11,849	11,797	11,645	11,431	11,322	11,191	10,982	10,879	10,572	10,610	10,471
50	Fan speed (rpm)	1,074	1,061	1,038	1,036	1,028	1,011	1,004	987	975	965	936	940	927
	Power input (W)	6,538	6,485	6,137	6,023	5,759	5,541	5,323	5,203	4,898	4,724	4,498	4,587	4,459
	Air flow (CFM)	11,801	11,838	11,583	11,527	11,383	11,144	11,058	10,909	10,695	10,581	10,276	10,326	10,185
75	Fan speed (rpm)	1,075	1,062	1,040	1,036	1,029	1,011	1,004	987	976	966	937	941	928
	Power input (W)	6,391	6,301	5,903	5,842	5,573	5,329	5,152	5,019	4,698	4,524	4,304	4,410	4,282
	Air flow (CFM)	11,575	11,558	11,249	11,218	11,055	10,820	10,745	10,585	10,345	10,217	9,914	9,964	9,825
100	Fan speed (rpm)	1,075	1,063	1,041	1,036	1,030	1,012	1,005	988	977	967	937	942	928
	Power input (W)	6,243	6,117	5,668	5,660	5,387	5,116	4,980	4,834	4,498	4,324	4,110	4,233	4,104
	Air flow (CFM)	11,350	11,278	10,915	10,910	10,728	10,496	10,432	10,260	9,995	9,853	9,552	9,602	9,465
125	Fan speed (rpm)	1,076	1,063	1,044	1,037	1,030	1,013	1,005	989	979	968	938	943	929
	Power input (W)	6,089	5,904	5,425	5,441	5,178	4,900	4,790	4,626	4,292	4,114	3,928	4,040	3,911
	Air flow (CFM)	11,019	10,945	10,566	10,567	10,361	10,123	10,054	9,870	9,598	9,432	9,155	9,168	9,021
150	Fan speed (rpm)	1,077	1,063	**1,047**	1,037	1,031	1,015	1,005	990	980	969	939	944	930
	Power input (W)	5,934	5,690	**5,181**	5,222	4,969	4,683	4,600	4,418	4,085	3,904	3,746	3,846	3,717
	Air flow (CFM)	10,688	10,612	**10,217**	10,224	9,994	9,749	9,677	9,480	9,201	9,010	8,758	8,735	8,577

Continued: KRFN880CFAN3

ESP	N	0	0.25	0.5	0.75	1	1.25	1.5	1.75	2	2.25	2.5	2.75	3
(Pa)	X	0.5	1	1.5	2	2.5	3	3.5	4	4.5	5	5.5	6	6.5
175	Fan speed (rpm)	1,077	1,064	1,047	1,038	1,032	1,015	1,006	991	981	969	939	944	931
	Power input (W)	5,613	5,449	4,984	4,995	4,746	4,455	4,382	4,203	3,862	3,683	3,548	3,645	3,512
	Air flow (CFM)	10,300	10,229	9,839	9,828	9,590	9,294	9,245	9,031	8,703	8,496	8,259	8,225	8,064
200	Fan speed (rpm)	1,078	1,065	1,048	1,039	1,033	1,016	1,006	992	982	969	940	945	932
	Power input (W)	5,292	5,207	4,786	4,768	4,522	4,226	4,163	3,987	3,638	3,462	3,349	3,443	3,307
	Air flow (CFM)	9,913	9,847	9,462	9,432	9,186	8,838	8,812	8,581	8,206	7,983	7,760	7,715	7,551
225	Fan speed (rpm)	1,079	1,066	1,051	1,040	1,034	1,017	1,007	993	983	970	941	946	932
	Power input (W)	5,294	4,968	4,527	4,522	4,299	3,990	3,958	3,758	3,408	3,240	3,135	3,203	3,078
	Air flow (CFM)	9,875	9,378	8,936	8,922	8,670	8,306	8,296	8,037	7,615	7,383	7,169	7,025	6,863
250	Fan speed (rpm)	1,080	1,067	1,053	1,042	1,034	1,018	1,008	994	984	970	942	947	933
	Power input (W)	5,295	4,728	4,267	4,275	4,076	3,753	3,753	3,528	3,177	3,018	2,921	2,962	2,849
	Air flow (CFM)	9,837	8,910	8,410	8,412	8,154	7,775	7,780	7,492	7,024	6,784	6,578	6,335	6,175
275	Fan speed (rpm)	1,082	1,068	1,050	1,042	1,035	1,019	1,009	995	985	971	942	948	934
	Power input (W)	4,879	4,488	4,013	4,034	3,825	3,496	3,486	3,341	2,975	2,803	2,717	2,792	2,530
	Air flow (CFM)	8,972	8,391	7,852	7,864	7,575	7,096	7,053	6,824	6,335	5,996	5,844	5,744	5,204
300	Fan speed (rpm)	1,084	1,070	1,047	1,043	1,035	1,021	1,010	995	986	973	943	949	935
	Power input (W)	4,463	4,248	3,759	3,793	3,574	3,239	3,219	3,153	2,773	2,587	2,512	2,621	2,210
	Air flow (CFM)	8,107	7,871	7,293	7,316	6,996	6,418	6,325	6,156	5,647	5,209	5,110	5,152	4,234
325	Fan speed (rpm)	1,084	1,072	1,054	1,046	1,036	1,023	1,010	997	986	/	/	/	/
	Power input (W)	4,219	3,996	3,636	3,538	3,313	3,089	3,219	2,818	2,773	/	/	/	/
	Air flow (CFM)	7,663	7,324	6,813	6,603	6,221	5,896	6,325	5,316	5,647	/	/	/	/

Continued: KRFN880CFAN3

ESP	N	0	0.25	0.5	0.75	1	1.25	1.5	1.75	2	2.25	2.5	2.75	3
(Pa)	X	0.5	1	1.5	2	2.5	3	3.5	4	4.5	5	5.5	6	6.5
350	Fan speed (rpm)	1,085	1,073	1,061	1,050	1,038	1,025	1,011	/	/	/	/	/	/
	Power input (W)	3,975	3,744	3,513	3,282	3,051	2,940	3,024	/	/	/	/	/	/
	Air flow (CFM)	7,219	6,776	6,332	5,889	5,445	5,375	5,815	/	/	/	/	/	/
375	Fan speed (rpm)	1,087	1,074	1,062	/	/	/	/	/	/	/	/	/	/
	Power input (W)	3,708	3,474	3,241	/	/	/	/	/	/	/	/	/	/
	Air flow (CFM)	6,428	5,990	5,551	/	/	/	/	/	/	/	/	/	/
400	Fan speed (rpm)	1,088	/	/	/	/	/	/	/	/	/	/	/	/
	Power input (W)	3,440	/	/	/	/	/	/	/	/	/	/	/	/
	Air flow (CFM)	5,637	/	/	/	/	/	/	/	/	/	/	/	/

Notes:

1. Legend: X – Regulation space of motor pulley (mm); N: Number of turns; ESP: External static pressure (in.w.g);

2: Pulley pitch factory set point: The table, No. of turns (N) = 5;

3. Bold data is the performance testing set point;

4. Shading data are rated airflow.

KRFN1050CFAN3

ESP	N	0	0.25	0.5	0.75	1	1.25	1.5	1.75	2	2.25	2.5	2.75	3
(Pa)	X	0.5	1	1.5	2	2.5	3	3.5	4	4.5	5	5.5	6	6.5
0	Fan speed (rpm)	/	/	/	/	/	/	1,106	1,090	1,074	1,053	1,032	1,027	1,022
	Power input (W)	/	/	/	/	/	/	8,203	7,899	7,595	7,256	6,917	6,894	6,872
	Air flow (CFM)	/	/	/	/	/	/	13,393	13,210	13,026	12,794	12,563	12,499	12,434
25	Fan speed (rpm)	/	/	/	/	1,133	1,133	1,106	1,090	1,074	1,053	1,032	1,027	1,022
	Power input (W)	/	/	/	/	9,142	9,142	8,010	7,702	7,394	7,078	6,761	6,736	6,710
	Air flow (CFM)	/	/	/	/	13,735	13,735	13,243	13,044	12,845	12,605	12,366	12,307	12,248
50	Fan speed (rpm)	/	/	/	/	1,135	1,135	1,108	1,092	1,076	1,055	1,034	1,029	1,023
	Power input (W)	/	/	/	/	8,664	8,664	7,736	7,427	7,118	6,828	6,537	6,509	6,480
	Air flow (CFM)	/	/	/	/	13,304	13,304	12,902	12,690	12,479	12,234	11,990	11,937	11,884
75	Fan speed (rpm)	/	/	/	/	1,137	1,137	1,109	1,094	1,078	1,056	1,035	1,030	1,025
	Power input (W)	/	/	/	/	8,425	8,425	7,490	7,160	6,831	9,544	6,258	6,241	6,225
	Air flow (CFM)	/	/	/	/	13,089	13,089	12,619	12,384	12,149	11,897	11,644	11,591	11,539
100	Fan speed (rpm)	/	/	1,153	1,146	1,138	1,138	1,110	1,095	1,080	1,058	1,036	1,031	1,026
	Power input (W)	/	/	9,127	8,545	8,186	8,186	7,244	6,893	6,543	6,261	5,978	5,974	5,970
	Air flow (CFM)	/	/	13,410	12,993	12,873	12,873	12,336	12,078	11,820	11,558	11,296	11,245	11,193
125	Fan speed (rpm)	/	/	1,155	1,148	1,140	1,140	1,112	1,097	1,083	1,060	1,038	1,033	1,028
	Power input (W)	/	/	8,920	8,330	7,963	7,963	7,007	6,642	6,278	6,012	5,746	5,733	5,720
	Air flow (CFM)	/	/	13,149	12,713	12,576	12,576	12,002	11,730	11,457	11,193	10,929	10,849	10,769
150	Fan speed (rpm)	1,172	1,165	1,157	1,150	1,142	1,142	1,113	1,099	1,085	1,062	1,039	1,035	1,030
	Power input (W)	9,645	9,015	8,712	8,069	7,741	7,080	6,770	6,391	6,012	5,763	5,513	5,492	5,470
	Air flow (CFM)	13,274	12,898	12,887	12,386	12,278	11,362	11,669	11,381	11,094	10,827	10,560	10,451	10,342

Continued: KRFN1050CFAN3

ESP	N	0	0.25	0.5	0.75	1	1.25	1.5	1.75	2	2.25	2.5	2.75	3
(Pa)	X	0.5	1	1.5	2	2.5	3	3.5	4	4.5	5	5.5	6	6.5
175	Fan speed (rpm)	1,172	1,166	1,158	1,152	1,144	1,144	1,114	1,100	1,087	1,064	1,041	1,036	1,032
	Power input (W)	9,364	8,711	8,385	7,748	7,426	7,426	6,467	6,083	5,699	5,468	5,236	5,210	5,184
	Air flow (CFM)	12,944	12,550	12,522	12,006	11,884	11,884	11,246	10,916	10,587	10,317	10,047	9,928	9,809
200	Fan speed (rpm)	1,173	1,167	1,159	1,153	1,145	1,145	1,116	1,102	1,088	1,065	1,042	1,038	1,033
	Power input (W)	9,083	8,407	8,058	7,415	7,111	7,111	6,164	5,775	5,387	5,173	4,959	4,928	4,897
	Air flow (CFM)	12,615	12,175	12,156	11,586	11,489	11,489	10,822	10,450	10,078	9,804	9,530	9,402	9,273
225	Fan speed (rpm)	1,174	1,168	1,161	1,155	1,147	1,147	1,117	1,104	1,091	1,067	1,044	1,039	1,035
	Power input (W)	8,884	8,145	7,732	7,083	6,772	6,772	5,812	5,408	5,004	4,804	4,603	4,562	4,520
	Air flow (CFM)	12,356	11,835	11,735	11,139	11,016	11,016	10,298	9,875	9,452	9,175	8,898	8,708	8,518
250	Fan speed (rpm)	1,176	1,172	1,162	1,156	1,148	1,148	1,119	1,106	1,093	1,069	1,046	1,041	1,036
	Power input (W)	8,686	7,877	7,406	6,744	6,433	6,433	5,460	5,041	4,622	4,436	4,250	4,197	4,145
	Air flow (CFM)	12,097	11,466	11,313	10,604	10,546	10,546	9,773	9,298	8,823	8,542	8,262	8,009	7,756
275	Fan speed (rpm)	1,187	1,176	**1,168**	1,159	1,149	1,149	1,121	1,108	1,095	1,071	1,047	1,042	1,038
	Power input (W)	8,462	7,587	**7,067**	6,394	6,081	6,081	5,095	4,722	4,348	4,159	3,970	3,834	3,697
	Air flow (CFM)	11,693	10,973	**10,835**	10,015	9,895	9,895	8,955	8,500	8,044	7,732	7,420	7,014	6,608
300	Fan speed (rpm)	1,182	1,175	1,166	1,159	1,150	1,150	1,123	1,109	1,096	1,072	1,048	1,044	1,039
	Power input (W)	8,114	7,246	6,711	6,082	5,721	5,721	4,730	4,402	4,075	3,883	3,691	3,469	3,247
	Air flow (CFM)	11,270	10,508	10,253	9,488	9,195	9,195	8,138	7,701	7,265	6,919	6,574	6,010	5,447
325	Fan speed (rpm)	1,185	1,178	1,169	1,161	1,152	1,138	1,124	/	/	/	/	/	/
	Power input (W)	7,721	6,884	6,379	5,782	5,453	4,990	4,527	/	/	/	/	/	/
	Air flow (CFM)	10,729	9,983	9,745	8,998	8,723	8,211	7,700	/	/	/	/	/	/

Continued: KRFN1050CFAN3

ESP	N	0	0.25	0.5	0.75	1	1.25	1.5	1.75	2	2.25	2.5	2.75	3
(Pa)	X	0.5	1	1.5	2	2.5	3	3.5	4	4.5	5	5.5	6	6.5
350	Fan speed (rpm)	1,188	1,182	1,171	1,164	1,154	1,139	1,125	/	/	/	/	/	/
	Power input (W)	7,328	6,237	6,046	5,347	5,185	4,755	4,324	/	/	/	/	/	/
	Air flow (CFM)	10,187	8,913	9,238	8,209	8,250	7,756	7,262	/	/	/	/	/	/
375	Fan speed (rpm)	1,191	1,183	1,173	1,165	1,155	1,140	1,126	/	/	/	/	/	/
	Power input (W)	7,114	6,130	5,596	5,121	4,916	4,576	4,236	/	/	/	/	/	/
	Air flow (CFM)	9,916	8,778	8,439	7,810	7,715	7,353	6,991	/	/	/	/	/	/
400	Fan speed (rpm)	1,195	1,185	1,175	1,166	1,156	1,141	1,127	/	/	/	/	/	/
	Power input (W)	6,899	6,022	5,146	4,896	4,647	4,397	4,148	/	/	/	/	/	/
	Air flow (CFM)	9,645	8,643	7,640	7,410	7,180	6,951	6,721	/	/	/	/	/	/

Notes:

1. Legend: X – Regulation space of motor pulley (mm); N: Number of turns; ESP: External static pressure (in.w.g);

2: Pulley pitch factory set point: The table, No. of turns (N) = 5;

3. Bold data is the performance testing set point;

4. Shading data are rated airflow.

8. Refrigerant cycle diagram

KRFN220CFAN3, KRFN260CFAN3,

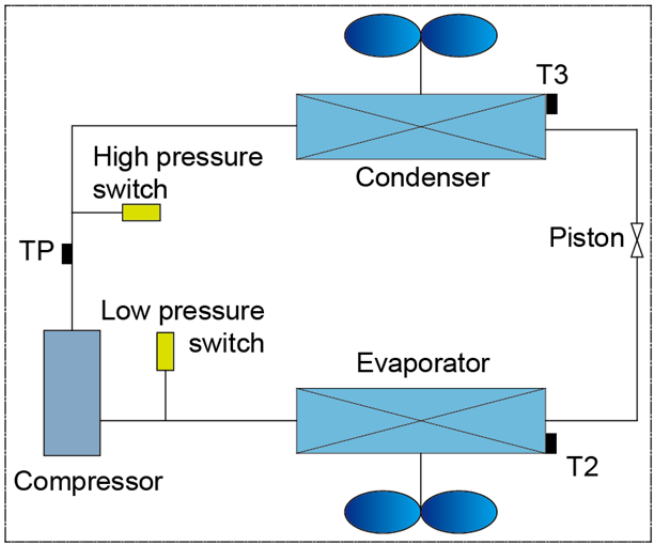

KRFN300CFAN3, KRFN350CFAN3,

KRFN440CFAN3, KRFN530CFAN3,

KRFN600CFAN3, KRFN700CFAN3,

KRFN880CFAN3, KRFN1050CFAN3:

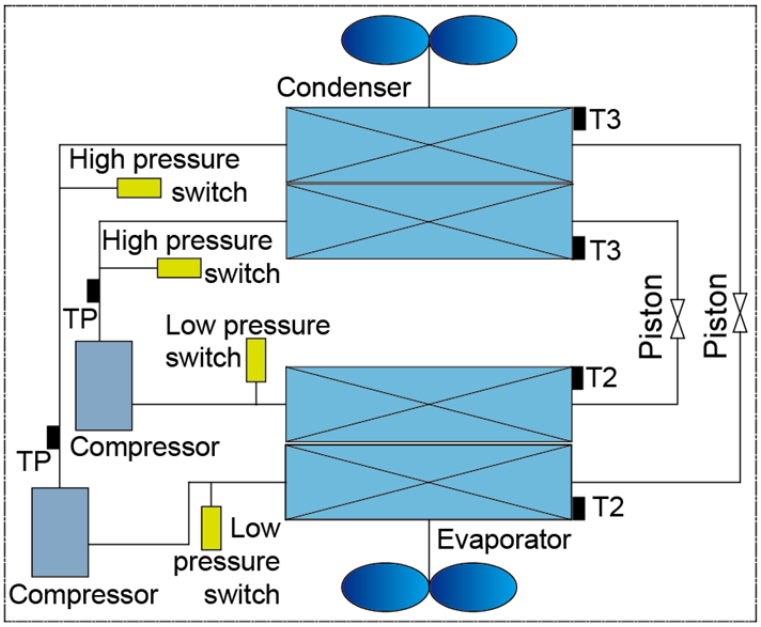

9. Operation limits

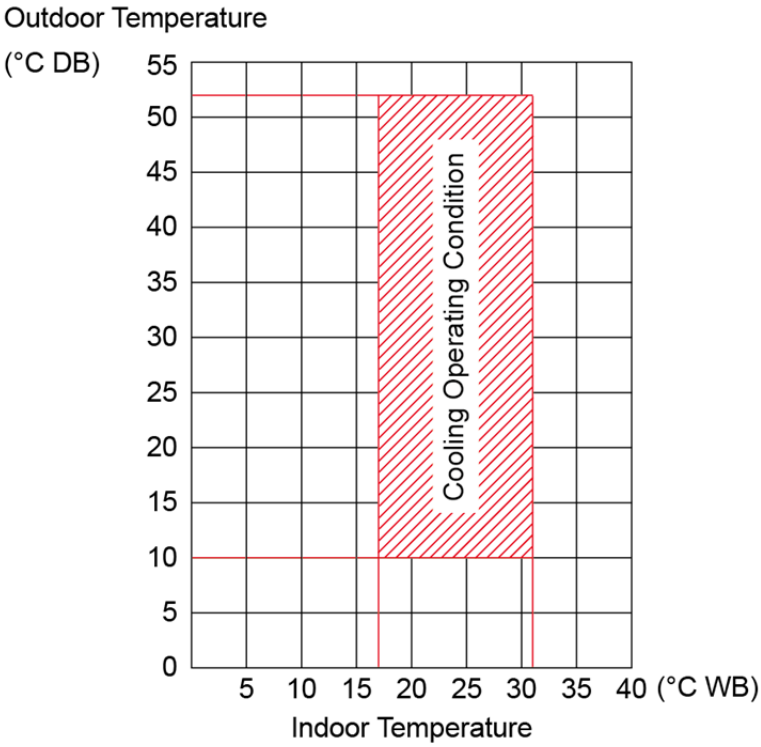

	Outdoor temperature	Indoor temperature
Cooling only mode	10°C~52°C	17°C~31°C

Room relative humidity should be less than 80%. If the unit operates in excess, the surface of the unit may attract condensation.

Part. 3 Installations

1. General information 101

2. Recommendations 102

3. Lifting 103

4. Installation 104

5. Condensate drainage 105

6. Duct work 106

7. Electrical wiring 107

8. Start-up 111

9. Safety control 112

10. Maintenance 122

Appendix: - Temperature sensor 126

1. General information

Warning and cautions appear at appropriate locations throughout this manual. Read these carefully, please.

Caution:

- ✧ Read this entire manual before beginning installation procedures.
- ✧ Body injury can result from high voltage electrical components, fast moving fans. For protection from these inherent hazards during installation and servicing, the electrical supply must be disconnected.
- ✧ If operating checks must be performed with the unit operating, it is the technicians responsibility to recognize these hazards and proceed safely.

Warning:

- ✧ Never replace a fuse with that of wrong rated current or other wires when a fuse blows out. Use of wire or copper wire may cause the unit to break down or cause a fire.
- ✧ Do not insert fingers, rods or other objects into the air inlet or outlet. When the fan is rotating at high speed, it will cause injury.
- ✧ Never use a flammable spray such as hair spray, lacquer or paint near the unit. It may cause a fire.
- ✧ Keep far away from high-frequency equipment. Also, keep away from the following places:
  A place where it is full of oil, gas; Places where salty air surrounding (near the coast); A place where is caustic gas (the sulfide in hot spring); Location in above places may cause malfunction or shorten the life span of the machine.
- ✧ In the case of extremely strong wind, please prevent the air from flowing backwards into the outside.
- ✧ Snow canopy is necessary in snowfall places on the outside.
- ✧ In the frequent thunderstruck place, lighting proof action should be taken.
- ✧ The refrigerant in the air conditioner is safe and normally does not leak.
- ✧ The temperature of refrigerant circuit will be high, please keep the interconnection cable away from the copper tube.
- ✧ The appliance should not be used by children without supervision.

2. Recommendations

2.1 Horizontal airflow application

- ✧ These units are designed and certified for outdoor installation. These units may be installed directly on wood flooring or on Class A, Class B and Class C roof covering material.
- ✧ Location of the unit must allow service clearance around it. Clearance of the unit must be given careful consideration.
- ✧ Check the handling facilities to ensure the safety of personnel and the units.
- ✧ Caution must be taken at all times to avoid personal injuries and damage to equipment.
- ✧ Unit must be mounted level for proper drainage of water through the holes in the base pan.
- ✧ Unit must not be exposed to direct roof water run-off.
- ✧ Flexible duct connectors must be of a flame retardant material. All duct work outside of the structure must be insulated and weatherproofed in accordance with local codes.
- ✧ Holes through exterior walls must be sealed in accordance with local codes.
- ✧ All fabricated outdoor ducts should be as short as possible.

2.2 Clearances

- ✧ The recommended clearances for single-unit installations reference to the following figure. These requirements are not only an important consideration when determining unit placement, but they are also essential to ensure adequate serviceability, maximum capacity, and peak operating efficiency.

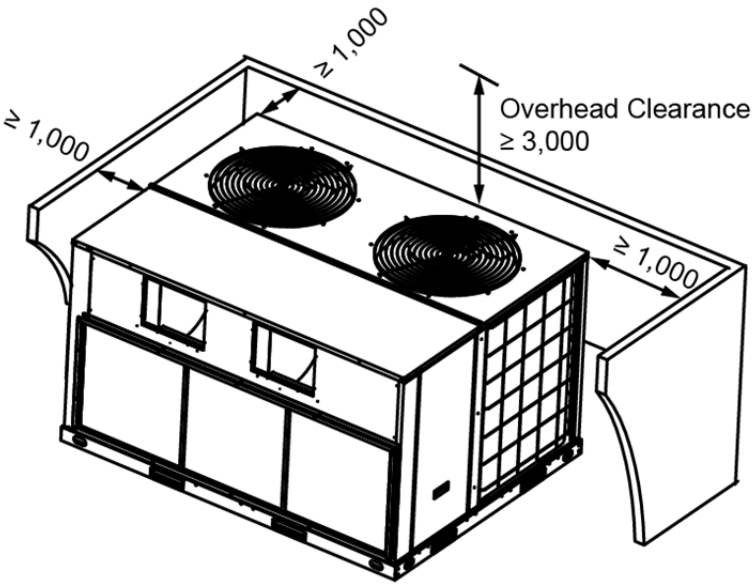

(Unit: mm)

- ✧ Any reduction of the unit clearances indicated in these pictures may result in condenser coil starvation or the recirculation of warm condenser air. Actual clearances which appear to be inadequate should be reviewed.

3. Lifting

- ✧ Rigging cables should have adequate capability to resist 3 times weight of unit. Before lift, please check and ensure that hooks are holding tightly to unit and lifting angles are no less than 60°.
- ✧ Cloth material or hard-paper should be padded in the contact place between unit and rigging cable. Rigging cable should be entwined a round at the hook for prevent danger by cable slip because of weight unbalance.
- ✧ During lifting, anyone forbidden lingering under the lifting unit.

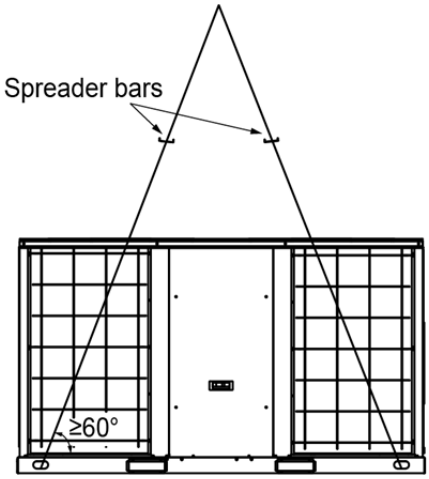

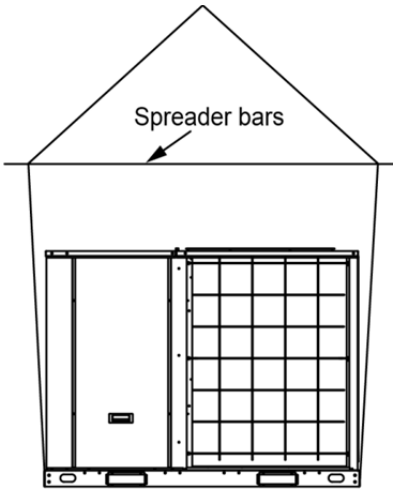

4. Installation

4.1 For roof top applications using a field fabricated frame and ducts:

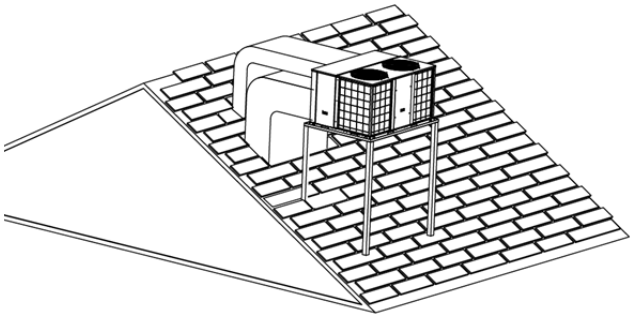

- ✧ The frame must be located and secured by bolting or welding to the roof. Flashing is required.
- ✧ The hole in the roof must be prepared in advance of installing the unit.
- ✧ Secure the ducts to the roof.
- ✧ Place the unit to the frame or roof curb.
- ✧ Insulate any ductwork outside of the structure with at least 2 inches of insulation and then weatherproof. There must be a weatherproof seal where the duct enters the structure.
- ✧ Complete the installation according to the instructions.
- ✧ Typical rooftop application with frame.

4.2 For ground level installations:

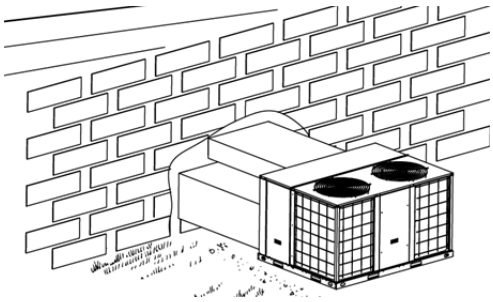

- ✧ The unit should be positioned on a pad in the size of the unit or larger. The unit must be level on the pad. The pad must not come in contact with the structure. Be sure the outdoor portion of the supply and return air ducts are as short as possible.
- ✧ Place the unit on the pad.

- ✧ Attach the supply and return air ducts to the unit.
- ✧ Insulate any ductwork outside of the structure with at least 2 inches of insulation and weatherproof. There must be a weatherproof seal where the duct enters the structure.
- ✧ Complete the installation.

5. Condensate drainage

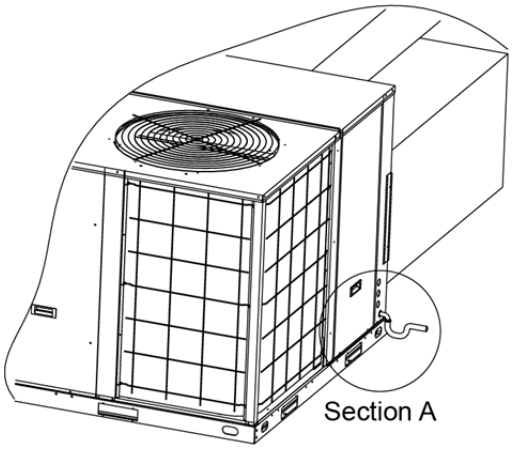

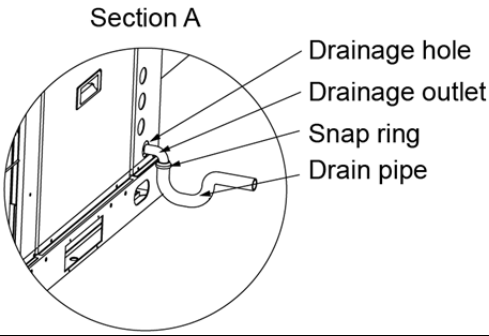

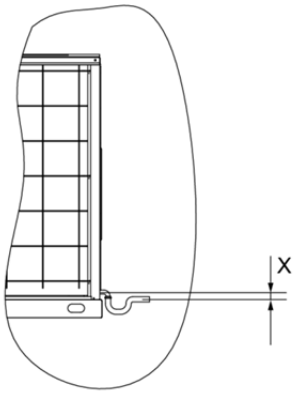

Model	X value (mm)	Model	X value (mm)
KRFN220CFAN3	20 ≤ X ≤ 40	KRFN260CFAN3	20 ≤ X ≤ 40
KRFN300CFAN3	20 ≤ X ≤ 40	KRFN350CFAN3	20 ≤ X ≤ 40
KRFN440CFAN3	20 ≤ X ≤ 40	KRFN530CFAN3	20 ≤ X ≤ 40
KRFN600CFAN3	20 ≤ X ≤ 40	KRFN700CFAN3	20 ≤ X ≤ 40
KRFN880CFAN3	20 ≤ X ≤ 40	KRFN1050CFAN3	0 < X ≤ 20

6. Duct work

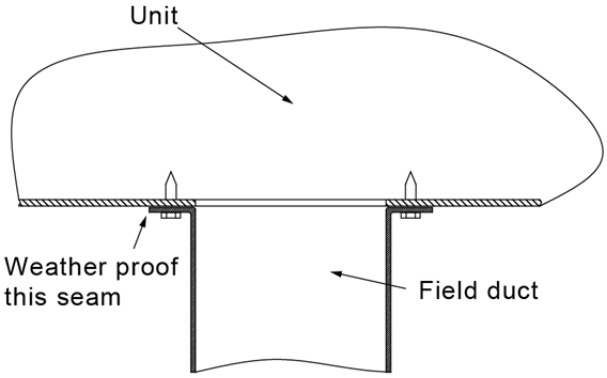

- ✧ All conditioned air ductwork should be insulated to minimize heating and cooling duct losses. Use a minimum of 2 inches of insulation with a vapor barrier. The outside ductwork must be weatherproofed between the unit and the building.
- ✧ When attaching ductwork to a horizontal unit, provide a flexible watertight connection to prevent noise transmission from the unit to the ducts. The flexible connection must be indoors and made out of heavy canvas.
- ✧ Do not draw the canvas taut between the solid ducts.
- ✧ At least 1m flame resistant layer must be laid at the end of air duct internal surface.

7. Electrical wiring

7.1 Warning

- ✧ An all-pole disconnection switch having a contact separation of at least 3mm in all poles should be connected in fixed wiring.
- ✧ The appliance shall be installed in accordance with national wiring regulations.
- ✧ An all-pole disconnection device which has at least 3mm separation distance in all pole and a residual current device (RCD) with the rating of above 10mA shall be incorporated in the fixed wiring according to the national rule.
- ✧ The appliance shall be installed in accordance with national wiring regulations.

7.2 Wiring provision

- ✧ The units are internally wired at the factory according to generally accepted electrical technology.
- ✧ Main power wiring to the unit control wiring between the control center and the unit, and earth wiring are required in the field.
- ✧ The following components are required: main power fuses; conduit coupling.
- ✧ Wire and fuse sizes should be selected in accordance with national and standard, taking the designed maximum current shall be the total of the compressor maximum current, condenser fan motor current and evaporator fan motor current.
- ✧ The wire size between the wired controller and the unit should be determined according to the following table, because the 24V power source is applied to the control circuit.

	Wiring length between wired controller and unit (One way)				
Min. wire size (mm^2)	10m	15m	20m	30m	40m
	0.5	0.5	0.75	0.75	1.0

- ✧ Main power supply parameters:

Model	Main power	Main power switch	Fuse
KRFN220CFAN3	380~415V, 3Ph~, 50Hz	35A	25A
KRFN260CFAN3		40A	30A
KRFN300CFAN3		45A	35A

KRFN350CFAN3		50A	40A
KRFN440CFAN3		63A	50A
KRFN530CFAN3		75A	63A
KRFN600CFAN3		90A	80A
KRFN700CFAN3		100A	90A
KRFN880CFAN3		120A	100A
KRFN1050CFAN3		120A	100A

Model	Wires for power supply	Type of wires
KRFN220CFAN3	3×6mm² + 2×3mm²	3 × UL1015 9AWG 2 × UL1015 12AWG
KRFN260CFAN3	3×10mm² + 2×6mm²	3 × UL1015 7AWG 2 × UL1015 9AWG
KRFN300CFAN3	3×10mm² + 2×6mm²	3 × UL1015 7AWG 2 × UL1015 9AWG
KRFN350CFAN3	3×10mm² + 2×6mm²	3 × UL1015 7AWG 2 × UL1015 9AWG
KRFN440CFAN3	3×16mm² + 2×10mm²	3 × UL1015 5AWG 2 × UL1015 7AWG
KRFN530CFAN3	3×16mm² + 2×10mm²	3 × UL1015 5AWG 2 × UL1015 7AWG
KRFN600CFAN3	3×25mm² + 2×10mm²	3 × UL1015 3AWG 2 × UL1015 7AWG
KRFN700CFAN3	3×25mm² + 2×10mm²	3 × UL1015 3AWG 2 × UL1015 5AWG
KRFN880CFAN3	3×35mm² + 2×16mm²	3 × UL1015 2AWG 2 × UL1015 5AWG
KRFN1050CFAN3	3×35mm² + 2×16mm²	3 × UL1015 2AWG 2 × UL1015 7AWG

✧ Power supply wiring diagram

KRFN220CFAN3, KRFN260CFAN3, KRFN300CFAN3, KRFN350CFAN3, KRFN440CFAN3, KRFN530CFAN3, KRFN600CFAN3, KRFN700CFAN3, KRFN880CFAN3, KRFN1050CFAN3:

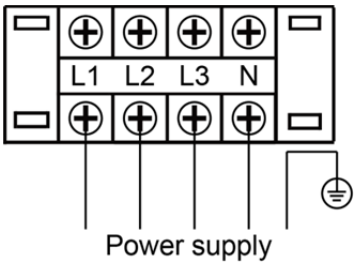

✧ Wired controller wiring diagram (Standard wired controller)

KRFN220CFAN3, KRFN260CFAN3, KRFN300CFAN3, KRFN350CFAN3, KRFN440CFAN3, KRFN530CFAN3, KRFN600CFAN3, KRFN700CFAN3, KRFN880CFAN3, KRFN1050CFAN3:

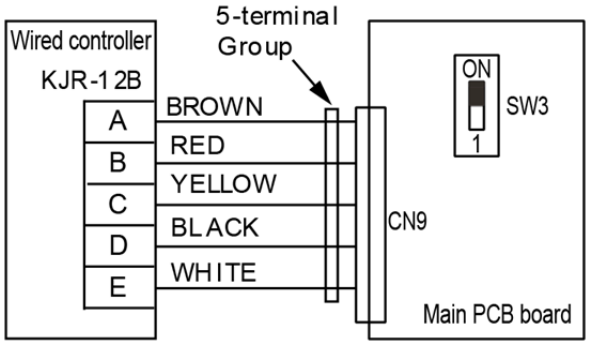

The standard wired controller model of these units is KWC-22. When KWC-22 is connected, the switch SW3 should be set to ON.

KRFN220CFAN3, KRFN260CFAN3:

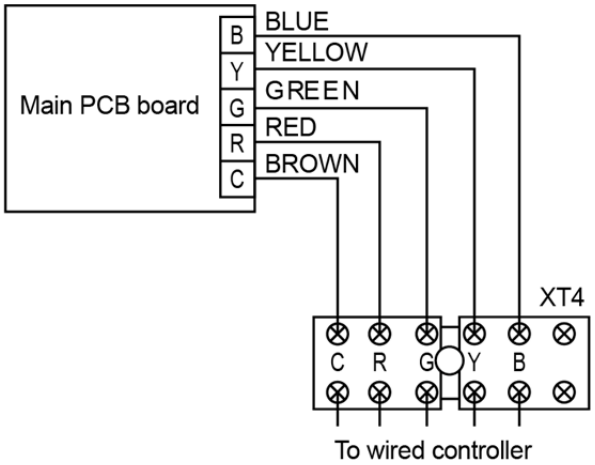

The standard wired controller model of these units is KFC-14.

8. Start-up

Before starting unit:

- ✧ Is the unit properly located and level with the proper clearance?
- ✧ Is the duct work correctly sized, run, taped, insulated, and weatherproofed with proper unit arrangement?
- ✧ Is the wiring properly sized and run according to the unit wiring diagram?
- ✧ Are all the wiring connections tight, including those in the unit?
- ✧ Has the unit been properly grounded and fused with the recommended fuse size?
- ✧ Has the air conditioning system been checked at the service ports for charge and leak tested if necessary?
- ✧ Does the condenser fan and indoor blower fan free without rubbing, and are they tight on the shafts?
- ✧ Are all covers and access panels in place to prevent air loss and safety hazards?

Starting the unit:

- ✧ When the unit operates under cooling mode, please check the line voltage of the unit. The voltage should be within the range shown on the unit nameplate.
- ✧ If low voltage is encountered, check the size and the length of power supply wire from the mian disconnect to the unit. The line may be undersized for the length of the run.

Shut-down the unit:

- ✧ Place the system selector in the OFF position or reset thermostat (Wired controller) at a setting above room temperature.
- ✧ Do not de-energize the main power supply disconnect except when unit is to be serviced.

9. Safety control

Functions

- ✧ Minutes delay for the compressor start-up:

  At the beginning of energizing, 3-minutes delay should be taken to start the compressor. While after the stop of the compressor, 7-minutes delay should be taken to restart the compressor.

- ✧ Compressor discharge temperature protection:

  When the temperature of compressor discharge is higher than 125°C (257°F), the compressor will stop. Once the temperature is lower than 90°C (194°F), the compressor can be started again.

- ✧ Reverse phase protection relay:

  The reverse phase protection relay will make the unit not start, when the power supply source is in correctly conneted.

  The checking of phase order is just carried out at the first time of electrifying. If malfunction happens then the checking will be going on until the order of phase is right, and the error code will be displayed on the board. If there is no problem in the first checking, then it will be omitted.

- ✧ High pressure and low pressure protection :

  When high pressure is equal or higher than 638 Psi, and lower pressure is equal or lower than 21Psi, the unit will stop.

Error & protection code

KRFN300CFAN3, KRFN350CFAN3, KRFN440CFAN3,

KRFN530CFAN3, KRFN600CFAN3, KRFN700CFAN3,

KRFN880CFAN3, KRFN1050CFAN3 :

Type	Content	Code	Remarks
Normal	Standby	------	
Normal	Constraint cool	ON	
Normal	Run	10.	
Error	Compressor phase sequence error or phase lack	E0	
Error	Condenser pipe temperature sensor (T3) in system A error	E1	
Error	Condenser pipe temperature sensor (T3) in system B error	E2	
Error	Over current protection of system A's compressor is active 3 times within 1 hour	E3	Unit shall be power-off to recovery
Error	Over current protection of system B's compressor is active 3 times within 1 hour	E4	Unit shall be power-off to recovery
Error	Evaporator pipe temperature sensor (T2) in system A error	E5	
Error	Evaporator pipe temperature sensor (T2) in system B error	E6	
Error	High & low pressure protection, or high discharge temperature protection of system A reached 3 times within 1 hour.	E7	
Error	High & low pressure protection, or high discharge temperature protection of system B reached 3 times within 1 hour.	E8	
Error	Indoor side room temperature sensor (T1) error	E9	
Error	Ambient temperature sensor (T4) error	EA	
Error	Wired controller communication error	Eb	
Error	Eeprom error	EE	
Protection	Over-current protection of compressor in system A	P0	
Protection	Over-current protection of compressor in system B	P1	
Protection	Over-current protection of indoor side fan motor	P2	

Continued :

Type	Content	Code	Remarks
Protection	Comprehensive protection of outdoor side fan motor	P3	
Protection	Protection of high/low pressure or high temperarture protection of discharge sensor in system A	P4	Comprehensive protection of system A
Protection	Protection of high/low pressure or high temperarture protection of discharge sensor in system B	P5	Comprehensive protection of system B
Protection	High temperature protection of condenser in system A	P8	Power off to recovery.
Protection	High temperature protection of condenser in system B	P9	Power off to recovery.
Protection	Anti-freezing protection of evaporator in system A	Pc	
Protection	Anti-freezing protection of evaporator in system B	Pd	
Protection	Protection of outdoor ambient temperature	PA	

Notes: If same protection which includes all system for 2-stage products is triggered 3 times within 1 hour, the unit should be power-off to recovery.

✧ **KRFN220CFAN3, KRFN260CFAN3:**

Content	LED1	LED2	LED3
	(Red)	(Yellow)	(Green)
Standby	OFF	OFF	ON
Normal operation	ON	ON	ON
Phase sequence error or phase lack	FLASH	FLASH	FLASH
Indoor side room temperature (T1) error, or high pressure protection, or high temperature protection of discharge sensor	FLASH	FLASH	OFF
Evaporator pipe temperature sensor (T2) error	FLASH	OFF	FLASH
Condenser pipe temperature sensor (T3) error	OFF	FLASH	FLASH
Ambient temperature sensor (T4) error	ON	FLASH	FLASH
Over-current protection of compressor	OFF	OFF	FLASH
Low temperature protection of evaporator	OFF	FLASH	OFF

Continued:

Content	LED1	LED2	LED3
	(Red)	(Yellow)	(Green)
Low temperature protection of evaporator	OFF	FLASH	OFF
High temperature protection of condenser	FLASH	OFF	OFF
Wired controller communication error	FLASH	FLASH	ON
Low pressure protection	FLASH	ON	FLASH

Phase sequence error or phase default:

Compressor sequence error or phase default:

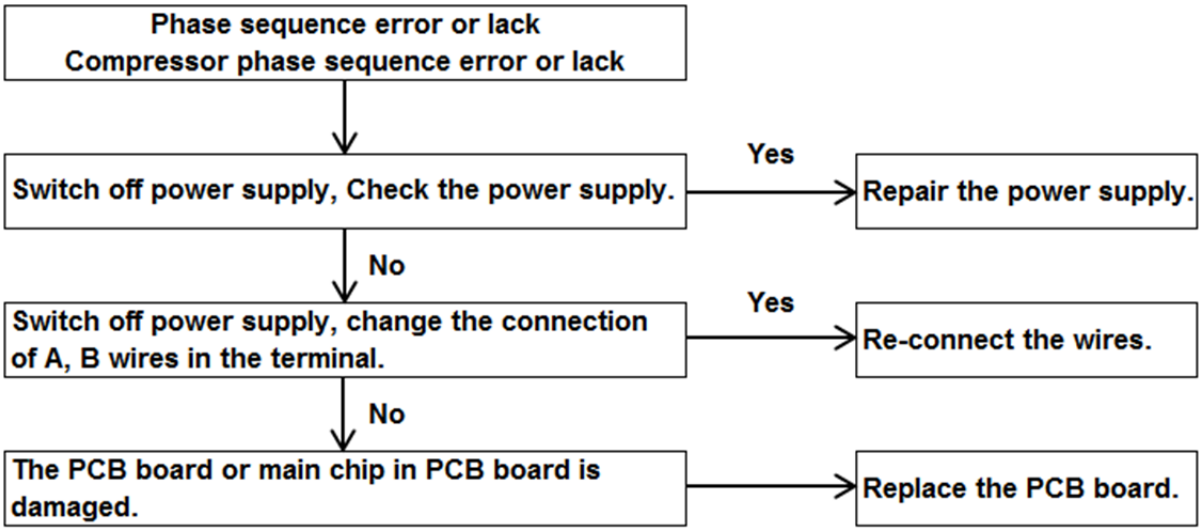

Evaporator pipe temperature sensor (T2) error:

Condenser pipe temperature sensor (T3) error :

Ambient temperature sensor (T4) error:

Indoor side room temperature sensor (T1) error :

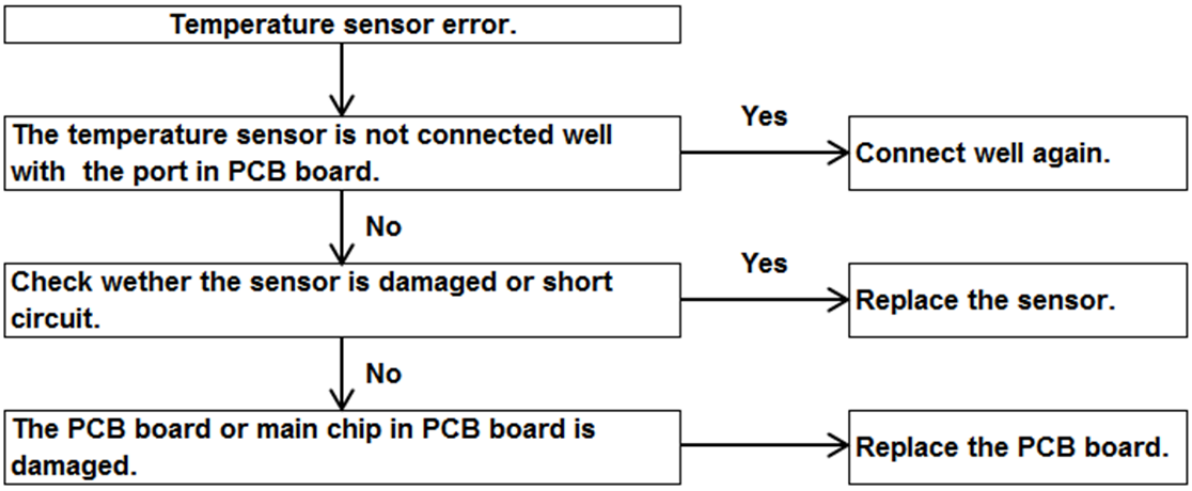

Over-current protection of compressor:

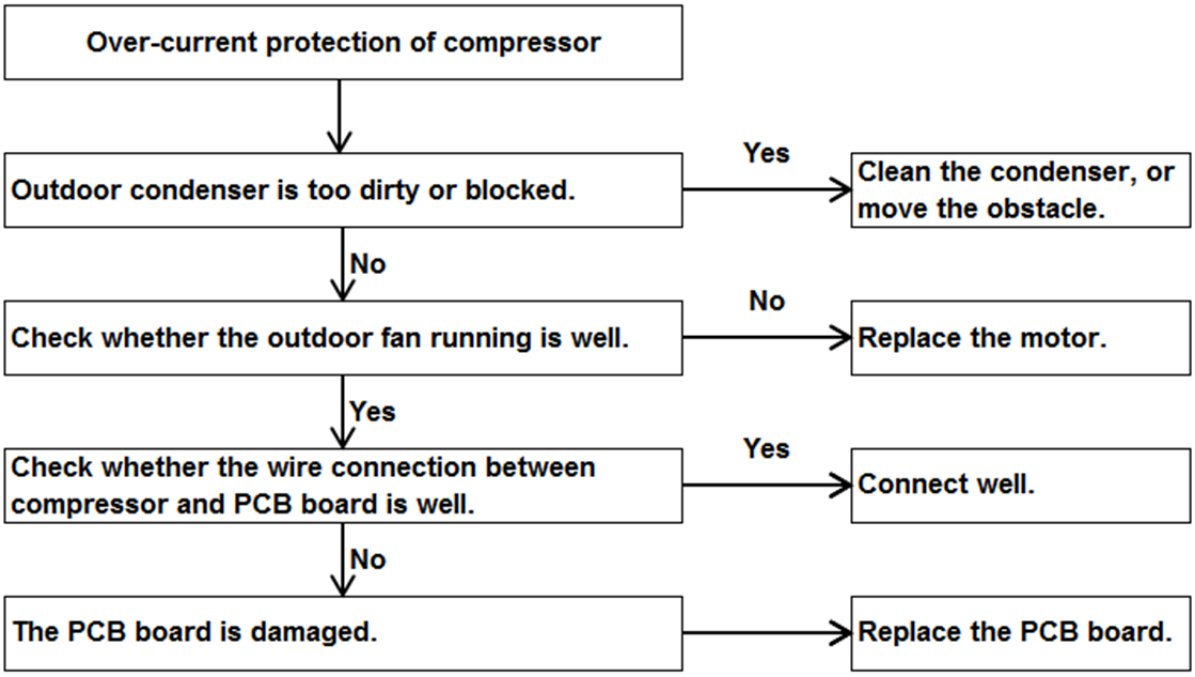

High pressure protection:

High discharge temperature protection :

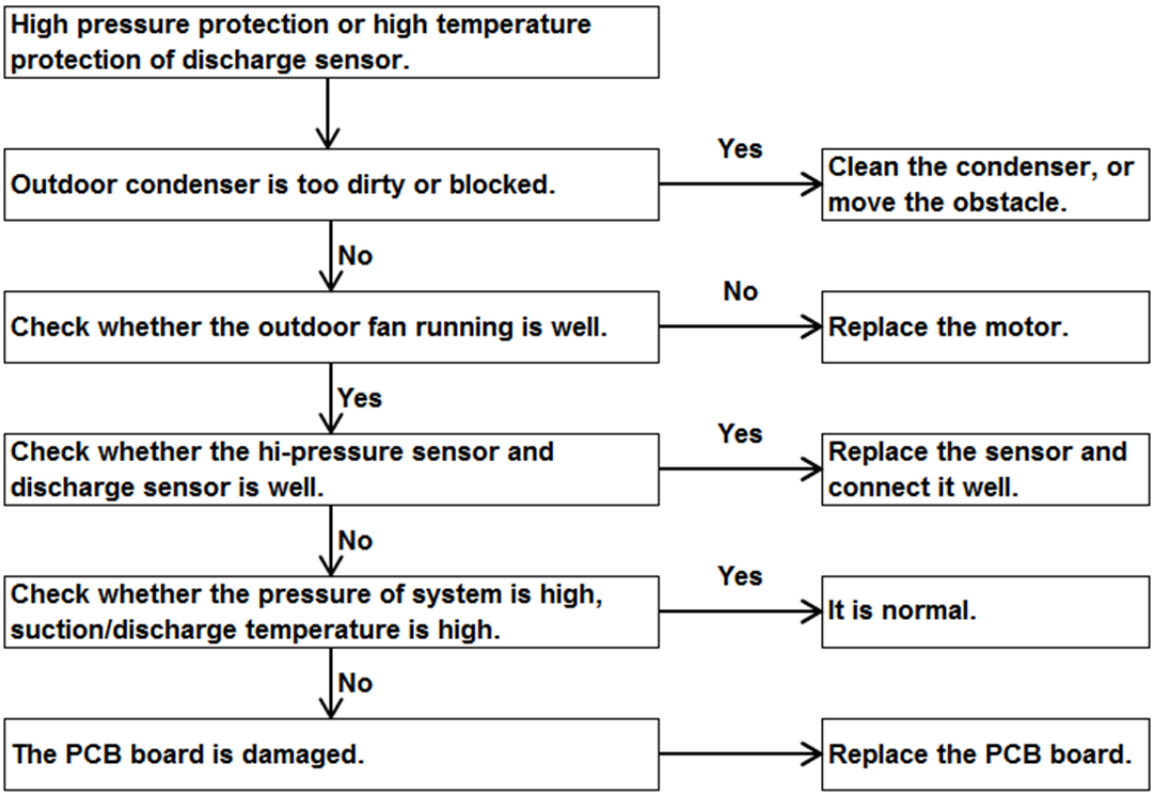

Wired controller communication error :

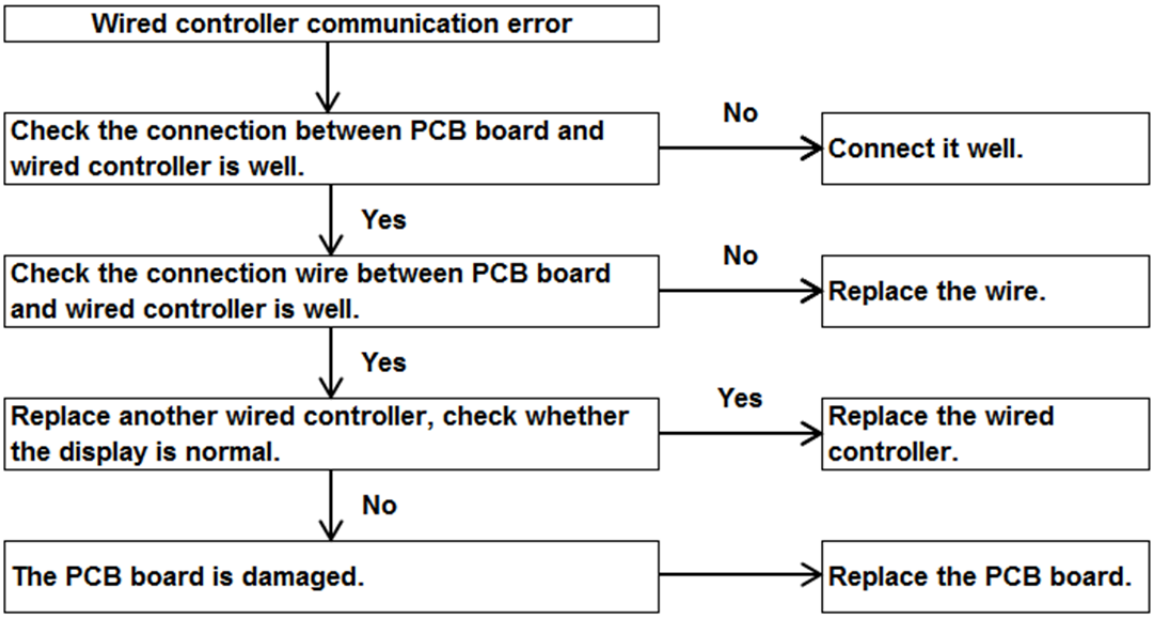

Low pressure protection :

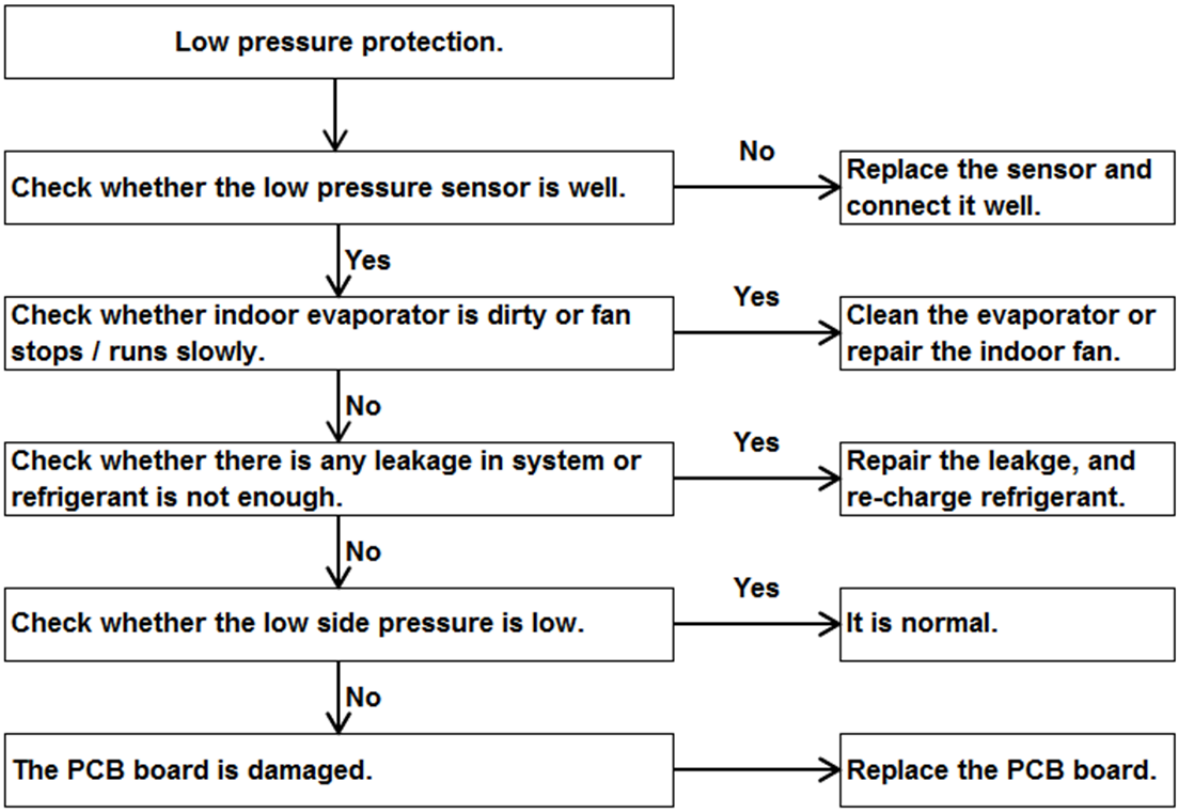

Eeprom error :

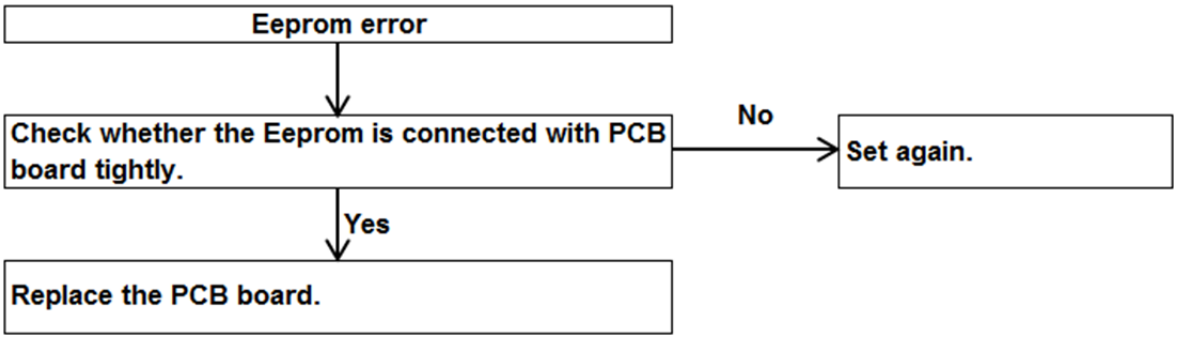

Over-current protection of indoor side fan motor :

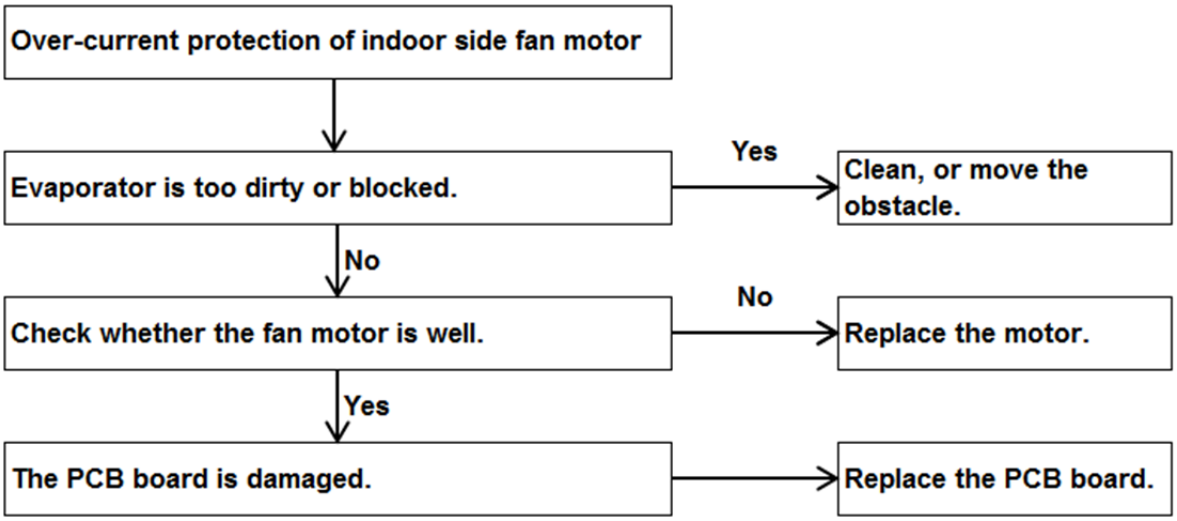

Comprehensive protection of outdoor side fan motor :

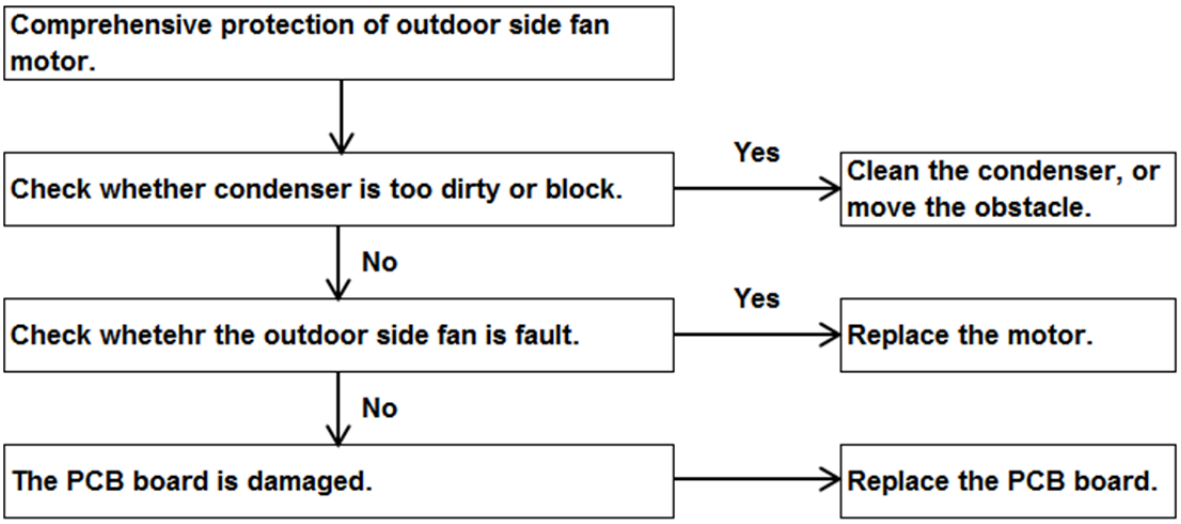

High temperature protection of condenser :

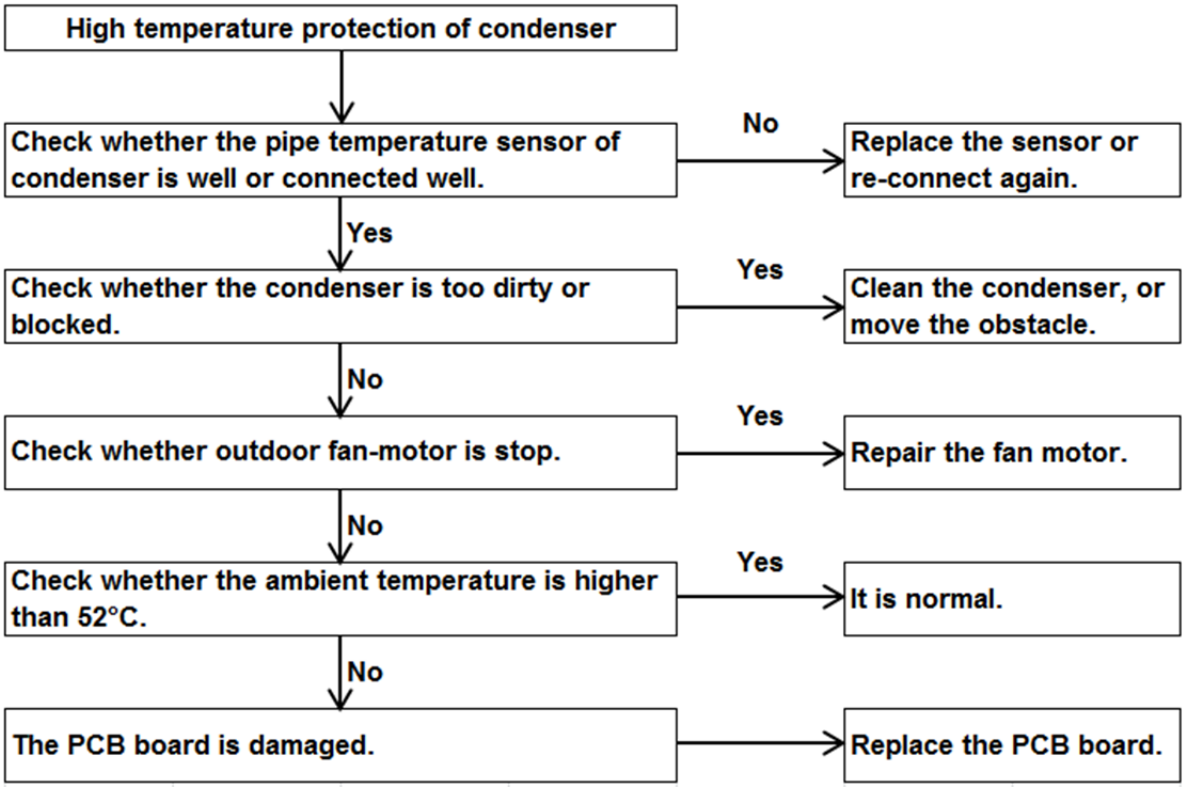

Low temperature protection of evaporator:

Anti-freezing protection of evaporator :

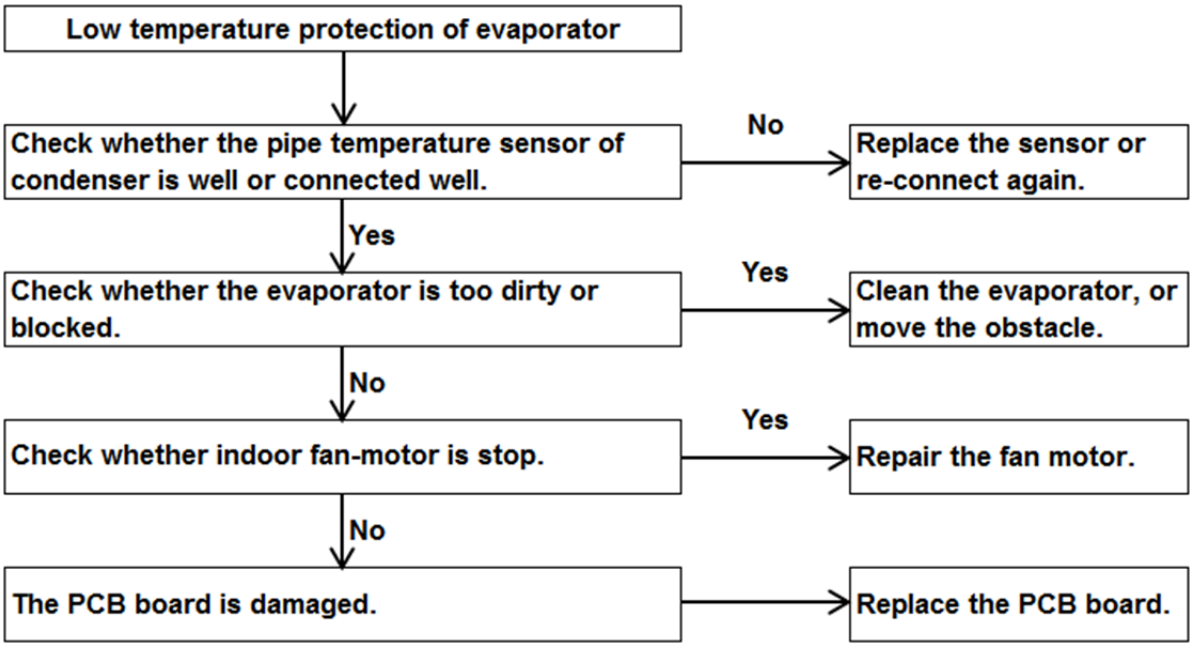

Protection of outdoor ambient temperature :

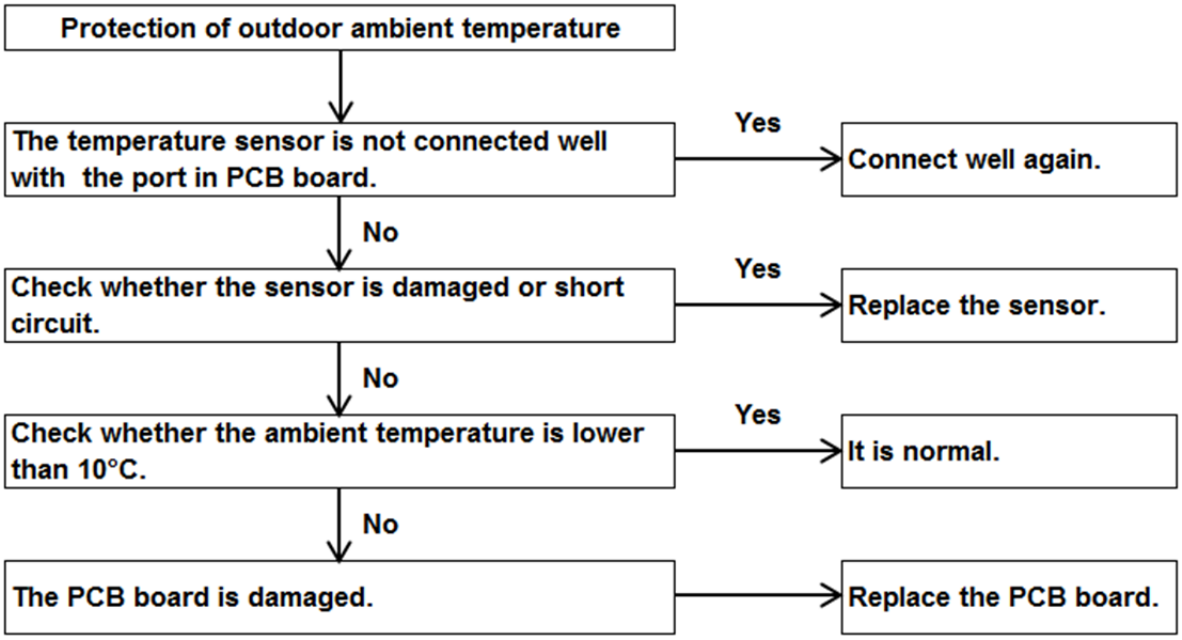

10. Maintenance

Caution

- ✧ Do not operate the unit without the evaporator fan access panel in place. Reinstall the access panel after performing any maintenance. Operating the unit without the access panel may result in severe personal injury.
- ✧ Disconnect the power supply before cleaning and maintenance.

Regular maintenance

Some regular maintenance has been carry on by user. It includes: change the one-time dust filter, clean casing, wash condenser and replace a new belt, as well as do some test for the equipment.

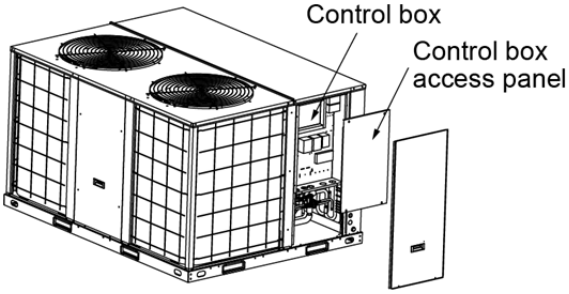

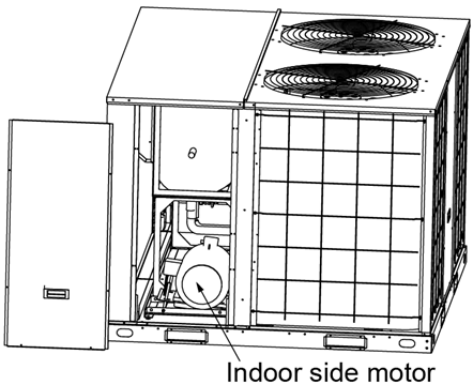

Regulating belt of tension

Refer to the following figure, loose 2 bolts, and move the electric motor to adjust belt tension. These two bolts are used for precision adjustment.

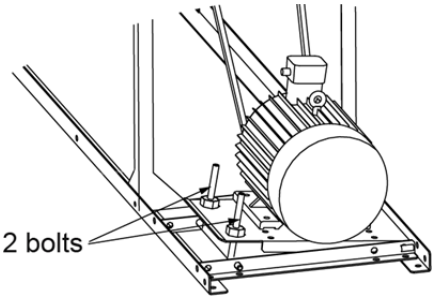

Belt tension is measured by belt tension indicator

- ✧ Calculate the deflection, deflection (L) = A/64.

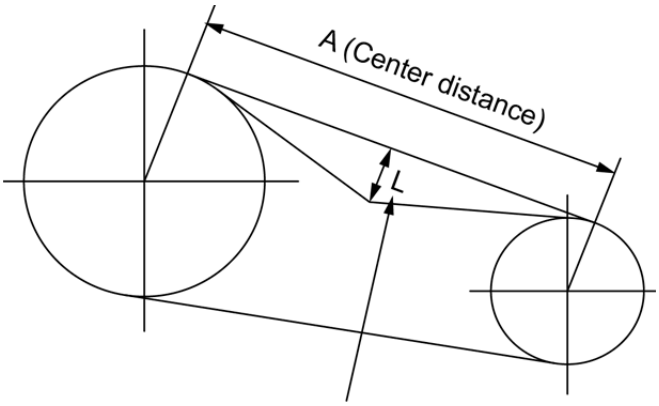

Belt tension indicator applied
to middle center distance

Notes: L=A/64

Model	A (mm)
KRFN300CFAN3	380
KRFN350CFAN3	380
KRFN440CFAN3	560
KRFN530CFAN3	560
KRFN600CFAN3	580
KRFN700CFAN3	580
KRFN880CFAN3	480
KRFN1050CFAN3	480

- ✧ Measure the belt deflection force, the force should be between the values shown in the following lists.
- ✧ The belt which is too tight or too loose may generate noise and be harmful to the unit.

Belt section	For required to deflection		
	Small pulley diameter	Newton	Kilogram-force
SPA	80mm~132mm	25N~35N	2.5kg.f~3.6kg.f

Air intake filter clean (The filter should be customized).

Step 1: Dismantle the air filter.

- ✧ Twist of screws and get out the plate.

✧ Pull out the filter along the supporting slot.

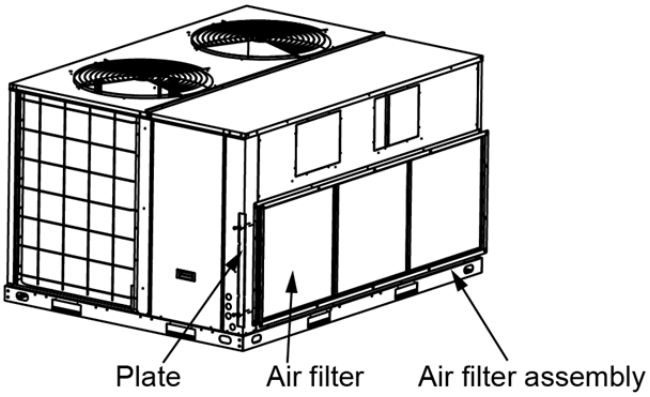

Step 2: Clean the air filter.

✧ Vacuum cleaner or fresh water may be used to clean the air filter. If the dust accumulated too much, please use soft brush and mild detergent to clean.

✧ The air-in side should face up when using vacuum cleaner.

✧ The air-in side should face down when using water.

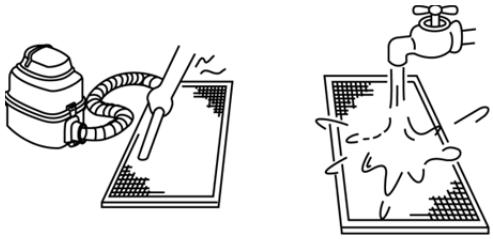

✧ After cleaning, please dry out in cool place. Do not dry out the air filter under direct sunshine or heat.

Step 3: Re-install the air filter.

Condenser coil

Unfiltered air circulates through the unit's condenser coil can cause the coil's surface to become clogged with dust. Clean the coil, vertically (i.e., with the fins), and stroke the coil surface with a soft brush. Be sure to keep all vegetation away from the condenser coil area.

Periodic maintenance

To keep the unit operating safety and efficiently, the entire system should be checked at least once each year. The examining the areas include:

✓ Filter;

- ✓ Motors and drive system components;
- ✓ Economizer gaskets (Reserved);
- ✓ Safety controls;
- ✓ Electrical components and wiring (For possible replacement and connection tightness);
- ✓ Condenser drainage (For cleaning);
- ✓ Unit duct connections (To check that they are physically sound and sealed to the unit casing);
- ✓ Unit mounting support (For structural integrity);
- ✓ The unit (For obvious unit deterioration).

Appendix: - Temperature sensor

Room / Pipe temperature sensor Resistance Valve (R25 = 10 kOhm±1%, B25/50 = 4100K±1%)

Temperature (°C)	$R_{Max.}$ (KΩ)	$R_{Nor.}$ (KΩ)	$R_{Min.}$ (KΩ)	Temperature Tolerance (°C)	
0	35.630	34.840	34.064	-0.41	0.42
1	33.741	33.011	32.292	-0.40	0.42
2	31.963	31.288	30.624	-0.39	0.41
3	30.290	29.666	29.051	-0.38	0.40
4	28.714	28.137	27.569	-0.38	0.39
5	27.230	26.697	26.172	-0.37	0.39
6	25.831	25.339	24.853	-0.36	0.38
7	24.513	24.058	23.609	-0.36	0.37
8	23.270	22.850	22.435	-0.35	0.36
9	22.097	21.710	21.327	-0.34	0.36
10	20.991	20.633	20.279	-0.33	0.35
11	19.947	19.617	19.290	-0.32	0.34
12	18.961	18.656	18.355	-0.32	0.33
13	18.030	17.749	17.471	-0.31	0.32
14	17.150	16.891	16.635	-0.30	0.32
15	16.318	16.080	15.844	-0.29	0.31
16	15.532	15.313	15.095	-0.29	0.30
17	14.788	14.587	14.386	-0.28	0.29
18	14.085	13.899	13.715	-0.27	0.28
19	13.419	13.249	13.079	-0.26	0.27
20	12.789	12.632	12.477	-0.25	0.27
21	12.191	12.048	11.906	-0.25	0.26
22	11.626	11.495	11.364	-0.24	0.25
23	11.090	10.970	10.850	-0.23	0.24

Continued:

Temperature (°C)	R Max. (KΩ)	R Nor. (KΩ)	R Min. (KΩ)	Temperature Tolerance (°C)	
24	10.582	10.472	10.363	-0.22	0.23
25	10.100	10.000	9.9000	-0.21	0.22
26	9.6518	9.5519	9.4520	-0.22	0.23
27	9.2262	9.1265	9.0270	-0.23	0.25
28	8.8218	8.7226	8.6235	-0.25	0.26
29	8.4376	8.3389	8.2405	-0.26	0.27
30	8.0723	7.9743	7.8767	-0.27	0.28
31	7.7250	7.6279	7.5312	-0.28	0.29
32	7.3947	7.2985	7.2028	-0.29	0.31
33	7.0805	6.9853	6.8906	-0.30	0.32
34	6.7814	6.6873	6.5939	-0.32	0.33
35	6.4968	6.4038	6.3116	-0.33	0.34
36	6.2257	6.1340	6.0431	-0.34	0.35
37	5.9676	5.8772	5.7875	-0.35	0.37
38	5.7216	5.6326	5.5443	-0.36	0.38
39	5.4873	5.3996	5.3127	-0.38	0.39
40	5.2639	5.1776	5.0922	-0.39	0.40
41	5.0509	4.9660	4.8821	-0.40	0.42
42	4.8478	4.7644	4.6819	-0.41	0.43
43	4.6541	4.5721	4.4911	-0.43	0.44
44	4.4692	4.3887	1.3092	-0.44	0.45
45	4.2928	4.2137	4.1357	-0.45	0.47
46	4.1244	4.0468	3.9702	-0.46	0.48
47	3.9636	3.8874	3.8123	-0.48	0.49
48	3.8100	3.7353	3.6617	-0.49	0.51

Continued:

Temperature (°C)	R Max. (KΩ)	R Nor. (KΩ)	R Min. (KΩ)	Temperature Tolerance (°C)	
49	3.6632	3.5900	3.5179	-0.50	0.52
50	3.5230	3.4512	3.3805	-0.52	0.53
51	3.3890	3.3186	3.2494	-0.53	0.55
52	3.2608	3.1919	3.1241	-0.54	0.56
53	3.1383	3.0708	3.0044	-0.56	0.57
54	3.0211	2.9550	2.8900	-0.57	0.59
55	2.9090	2.8442	2.7806	-0.58	0.60
56	2.8017	2.7382	2.6760	-0.60	0.61
57	2.6990	2.6369	2.5759	-0.61	0.63
58	2.6006	2.5398	2.4802	-0.63	0.64
59	2.5064	2.4469	2.3886	-0.64	0.66
60	2.4162	2.3580	2.3009	-0.65	0.67
61	2.3298	2.2728	2.2170	-0.67	0.68
62	2.2470	2.1912	2.1366	-0.68	0.70
63	2.1676	2.1130	2.0596	-0.70	0.71
64	2.0914	2.0381	1.9858	-0.71	0.73
65	2.0184	1.9662	1.9151	-0.73	0.74
66	1.9484	1.8973	1.8474	-0.74	0.76
67	1.8812	1.8312	1.7824	-0.76	0.77
68	1.8167	1.7678	1.7201	-0.77	0.78
69	1.7548	1.7070	1.6603	-0.79	0.80
70	1.6954	1.6486	1.6029	-0.80	0.81